CHARTER TOWNSHIP OF OXFORD

DECK PROCESS

1.) Submit Zoning Compliance/Building Permit application.

Include contractor contact and license information if applicable.
Also include with application:

- Current tax statement marked paid (available in our treasury).
- Two copies of the property plot plan or sketch of property with deck placement ---with setback dimensions & existing easements
- Two sets of construction plans with all necessary material and structural details for plan review
  - ✓ Height of Deck Above Grade – Minimum to Maximum
  - ✓ Post Holes with Minimum 12" Diameter Full Depth by 8" Concrete Pad
  - ✓ Post Size
  - ✓ Beam Size and Span
  - ✓ Joist Size – Span and Centers – Joist to Beam Attachment
  - ✓ Connection of Post to Beam Details
  - ✓ Handrail Height 34-38 Inches Above Nosing ---Graspable
  - ✓ Guardrail Height Minimum of 36 Inches --- Maximum Spacing 4"
  - ✓ Saw Toothed Stair Stringers must be Doubled and have Full Bearing at Both Ends
  - ✓ Ledger Attachment – Lateral Load Detail – Vertical Attachment Detail - Flashing Detail
    *****PROOF THAT LEDGER IS ATTACHED TO BOND SHALL BE REQUIRED FROM INSIDE*****
  - ✓ Stair Detail 36" Min Width – Riset 8/14 Max – Run 9" Min
- Cash or check payment in the amount of $125.00 for the Zoning Compliance (this does not include Building Permit fees).

2.) Once application and $125.00 payment are submitted, the Zoning Official will go out to the property for a stake inspection. He does this on Wednesday mornings <u>only</u>. If the site is not staked and ready, it will have to wait another week for him to go out.

3.) When stakes and Zoning Compliance are approved, we will pass the application and plans onto our Building Official for plan review. He will go over the construction plans, making sure the material and structural specifications are in compliance with the building code. He will include notes on a plan review sheet that will need to be signed and followed for construction of the structure.

4.) After the Building Official has approved the plans, we will set up a building permit to be paid for and picked up by the homeowner or contractor. Building permit fees are shown and explained on the following page.

5.) When the Building Permit is paid for and applicants have their copies, a post holes inspection may be called in and scheduled. Building inspections are done Tuesdays, Wednesdays, and Thursdays after 8:00AM - 5:00PM. All inspections need to be called in before 3:00 PM the day prior to the inspection. If the site is not ready for inspection or the inspector does not have access to inspect construction, the contractor and/or

homeowner will be liable for a $50.00 re-inspection fee that would need to be paid before he goes back out to the site for inspection.

6.) The last step for any deck work is for a final building inspection after completion of construction. Any electrical, mechanical, or plumbing work will need a permit pulled and inspected also.

REQUIREMENTS FOR DECK INSPECTIONS:

1. Post Holes dug with concrete pad at base. Ledger to be mounted on house and flashed for post hole inspection.
2. Rough Framing of floor construction if not open at time of final ($50.00 extra inspection fee due)
3. Final Inspection: Completed Deck

NOTE: Proper Fasteners Required

NOTE: Stair Nosing Shall be required if under 11" threads

NOTE: Reviewed for code compliance only - - Construction to be verified in field

Decks may be attached to the building using a ledger board, bolted to the house's bond board, or be free standing (unattached).

All posts must be 42" deep in the ground.

There are a number of ways to set the posts, the most common and preferable is to place a 4 inch thick layer of concrete in the bottom of the hole. Second dry cement poured into the hole, thirdly, pea gravel base.

All posts shall be set on virgin ground, this is especially important if you are placing post in a recently backfilled area. Settling can occur if you do not extend through the backfilled area.

Beams are sized based on the loads imposed by the transferred loads from the joists, and the spacing of the posts.

Joists are sized based on the span, the loads imposed and the grade of the lumber being used. All joists are usually spaced at 16" O.C.

Example: Southern Pine, #2, 2 x 6, will span 9'9" @ 16' O.C.
Southern Pine, #2, 2 x 8, will span 12'10" @ 16' O.C.

Note: Your lumber yard will help in determining the size and grade of lumber needed.

All uprights (Balusters) in the railing shall be spaced no more than 4" O.C.

Handrail height shall be 36" above the floor decking.

All decks over 30" in height above the grade shall have hand rails at both the stairs and at the deck itself.

Figure 30: Stair Guard Requirements

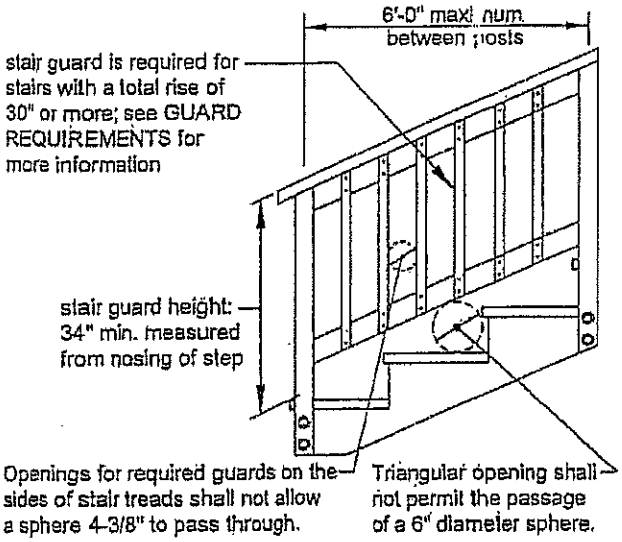

Figure 31: Stair Stringer Attachment Detail

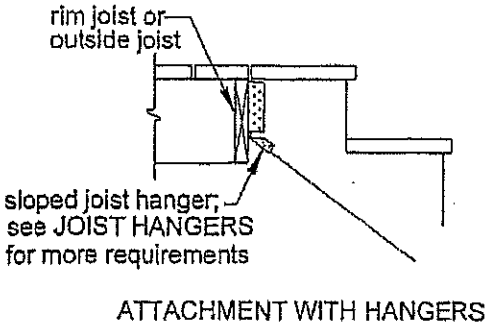

Tread and Riser Detail

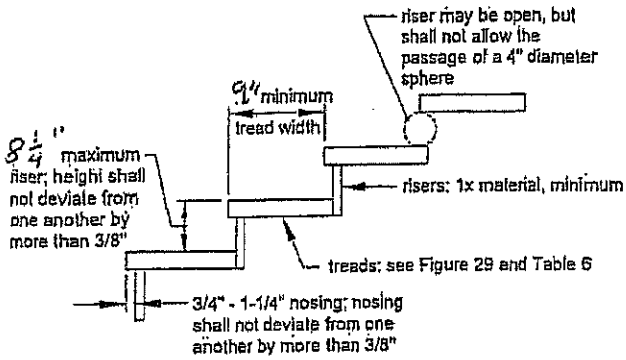

Stair Requirements

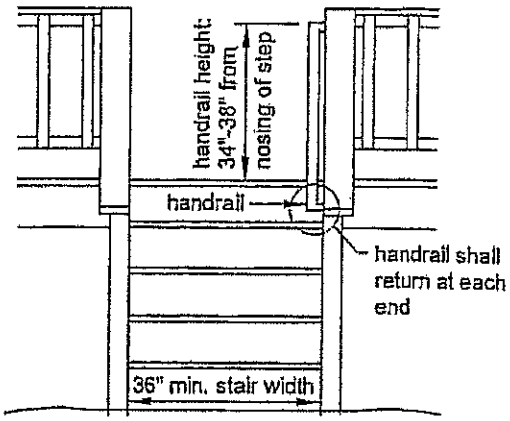

STAIR HANDRAIL REQUIREMENTS

All stairs with 4 or more risers shall have a handrail on at least one side (see Figure 32A) [R311.5.6]. The handrail height measured vertically from the sloped plane adjoining the tread nosing shall be not less than 34 inches and not more than 38 inches (see Figure 30) [R311.5.6.1]. Handrails shall be graspable and shall be composed of decay-resistant and/or corrosion resistant material. Handrails shall be Type I, Type II, or provide equivalent graspability (see Figure 32B). Type I shall have a perimeter dimension of at least 4" and not greater than 6-¼". Type II rails with a perimeter greater than 6-¼" shall provide a graspable finger recess area on both sides of the profile [R311.5.6.3]. All shapes shall have a smooth surface with no sharp corners. Handrails shall run continuously from a point directly over the lowest riser to a point directly over the highest riser and shall return to the guard at each end (see Figure 33). Handrails may be interrupted by guard posts at a turn in the stair [R311.5.6.2].

Figure 32A: Handrail Mounting Examples

Fasten handrails per manufacturer recommendations

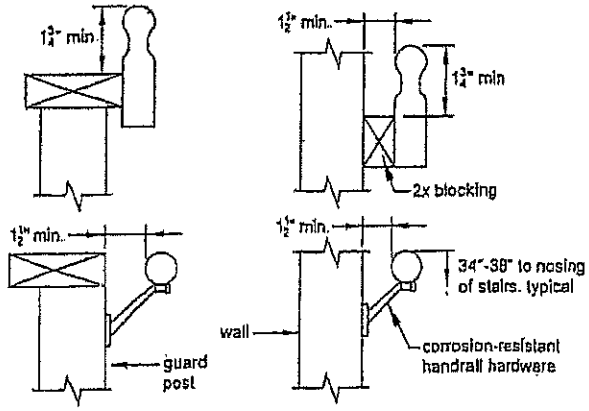

Figure 32B: Handrail Grip Size

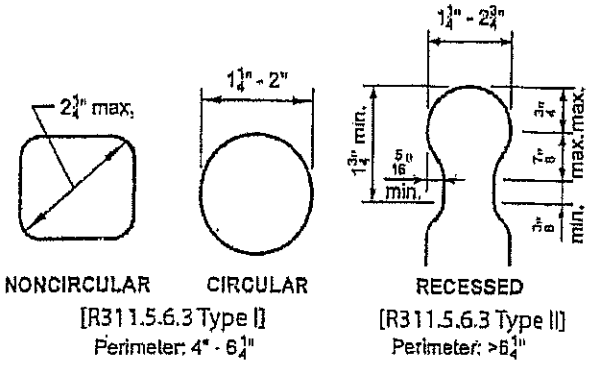

NOTE:
THE GREATEST RISER HEIGHT WITHIN ANY FLIGHT OF STAIRS SHALL NOT EXCEED THE SMALLEST BY MORE THAN 3/8"

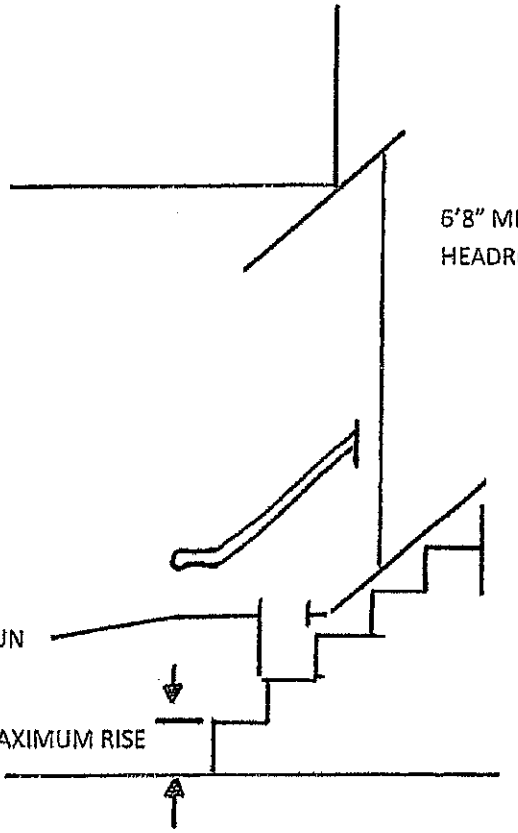

OPEN RISERS ARE PERMITTED, PROVIDED THAT THE OPENING BETWEEN TREADS DOES NOT PERMIT THE PASSAGE OF A 4" DIAMETER (102MM) SPHERE.

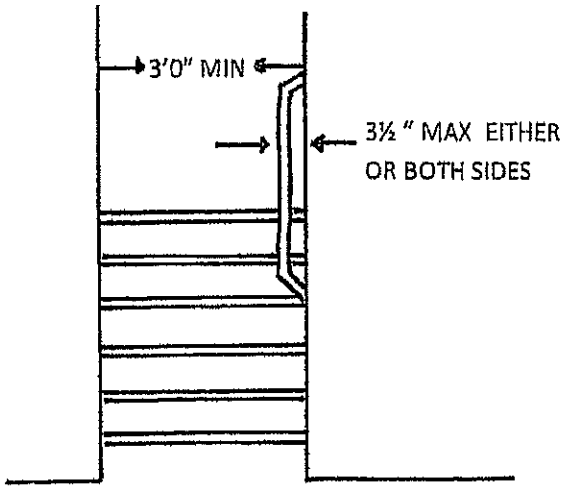

STAIRWAYS

SECTION 314

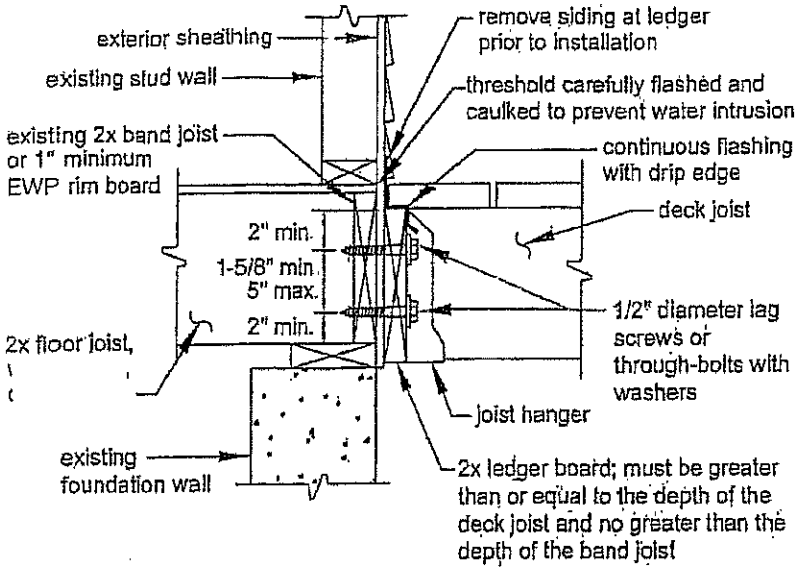

edger Board to Foundation Wall (Concrete or Solid Masonry)

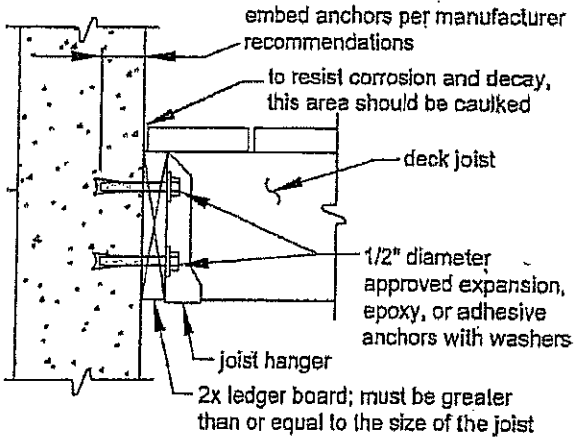

Example Guard Detail

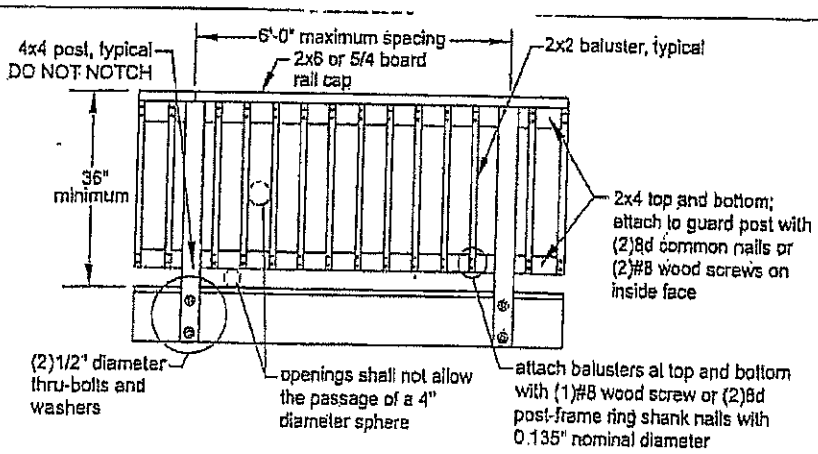

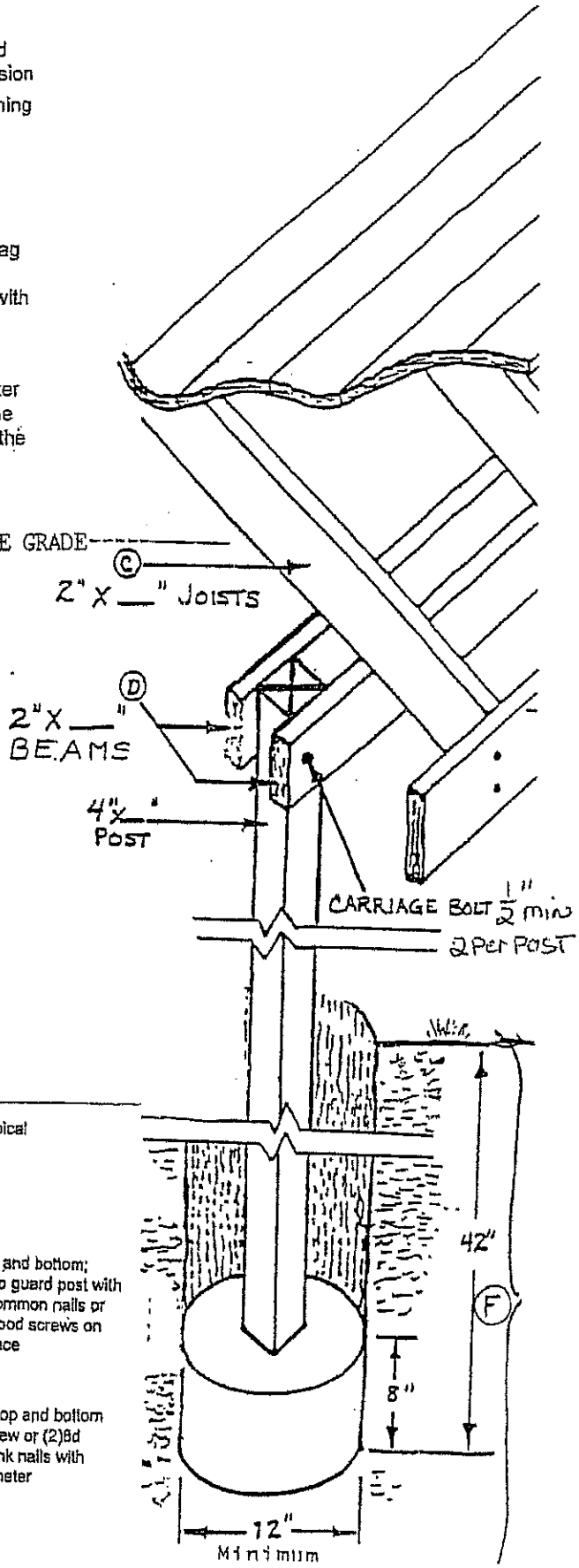

PRESSURE TREATED WOOD/CONNECTORS

By Larry Lehman, Chief Building Division

Pressure-treated wood has been used for many years in buildings to provide increased protection against decay and termites where wood is in contact with, or close proximity to soil. Its required use identified in sections R319 and R320 of the 2003 Michigan Residential Code (MRC), and section 2304.11 of the 2003 Michigan Building Code (MBC), which also allows naturally durable wood.

As of December 31, 2003, Chromated Copper Arsenate (CCA-C) pressure-treated wood, the building industry standard for many years, is no longer being manufactured for residential and general consumer use. Several of the alternative preservatives that have replaced CCA-C can be more corrosive to steel products such as nails, screws, bolts, and metal connectors

As a safety precaution, manufacturers have performed a series of industry standard tests to measure the corrosiveness of the alternative pressure-treated woods. Test results have confirmed that many galvanized connectors are not appropriate for use with many of the alternative pressure-treated woods on the market. Stainless steel connectors and fasteners are the preferred choice for use with alternative pressure-treated woods as they offer the greatest corrosion resistance. Galvanized connectors and hot dipped galvanized fasteners may still be used as connectors for most pressure-treated woods. **In general, the thicker the coating of zinc, the longer the life expectancy. Many manufacturers are now recommending G-185 (1.85) ounces of Zinc/sq. foot) at a minimum.**

The wood treatment industry recommends the use of hot-dipped galvanized and stainless steel fasteners and connectors with pressure-treated woods. Since there are many brands of pressure-treated woods available and many applications for treated woods, it is highly recommended that builders, designers, and owners consult with their treated wood supplier for product recommendations regarding appropriate connector and fastener types and coatings. **Whether using stainless steel or hot-dipped galvanized products, both connectors and fasteners must be of the same type and have the same coating/finish.** Questions may be directed to the Building Division at 517-241-9317.

GRASPABLE HAND_RAILS

ATTACHMENT A

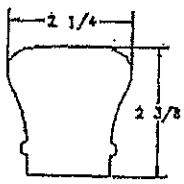

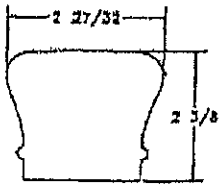

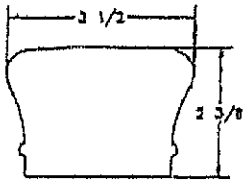

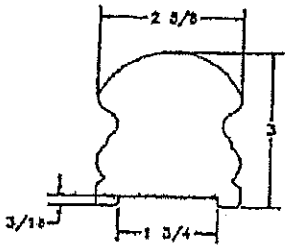

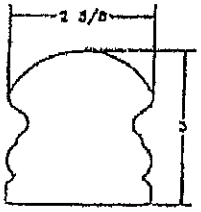

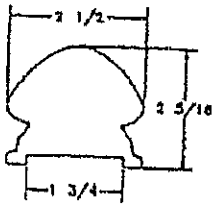

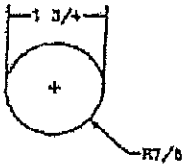

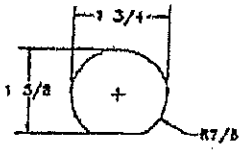

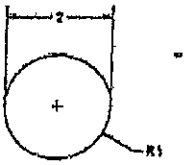

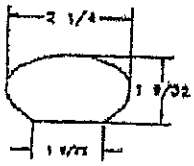

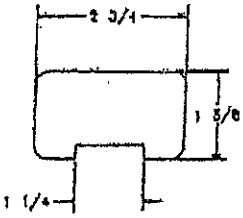

TABLE R502.2.2.1
FASTENER SPACING FOR A SOUTHERN PINE OR HEM-FIR DECK LEDGER AND A 2-INCH NOMINAL SOLID-SAWN SPRUCE-PINE-FIR BAND JOIST[c, f, g]
(Deck live load = 40 psf, deck dead load = 10 psf)

JOIST SPAN	6' and less	6'1" to 8'	8'1" to 10'	10'1" to 12'	12'1" to 14'	14'1" to 16'	16'1" to 18'
Connection details	On-center spacing of fasteners[d, e]						
$^1/_2$ inch diameter lag screw with $^{15}/_{32}$ inch maximum sheathing[a]	30	23	18	15	13	11	10
$^1/_2$ inch diameter bolt with $^{15}/_{32}$ inch maximum sheathing	36	36	34	29	24	21	19
$^1/_2$ inch diameter bolt with $^{15}/_{32}$ inch maximum sheathing and $^1/_2$ inch stacked washers[b, h]	36	36	29	24	21	18	16

For SI: 1 inch = 25 4 mm, 1 foot = 304.8 mm 1 pound per square foot = 0 0479kPa.

a The tip of the lag screw shall fully extend beyond the inside face of the band joist

b The maximum gap between the face of the ledger board and face of the wall sheathing shall be $^1/_2$".

c Ledgers shall be flashed to prevent water from contacting the house band joist.

d. Lag screws and bolts shall be staggered in accordance with Section R502 2 2.1.1

e Deck ledger shall be minimum 2 × 8 pressure-preservative-treated No 2 grade lumber, or other approved materials as established by standard engineering practice

f When solid-sawn pressure-preservative-treated deck ledgers are attached to a minimum 1 inch thick engineered wood product (structural composite lumber, laminated veneer lumber or wood structural panel band joist), the ledger attachment shall be designed in accordance with accepted engineering practice.

g A minimum 1 × 9$^1/_2$ Douglas Fir laminated veneer lumber rimboard shall be permitted in lieu of the 2-inch nominal band joist.

h Wood structural panel sheathing, gypsum board sheathing or foam sheathing not exceeding 1 inch in thickness shall be permitted. The maximum distance between the face of the ledger board and the face of the band joist shall be 1 inch

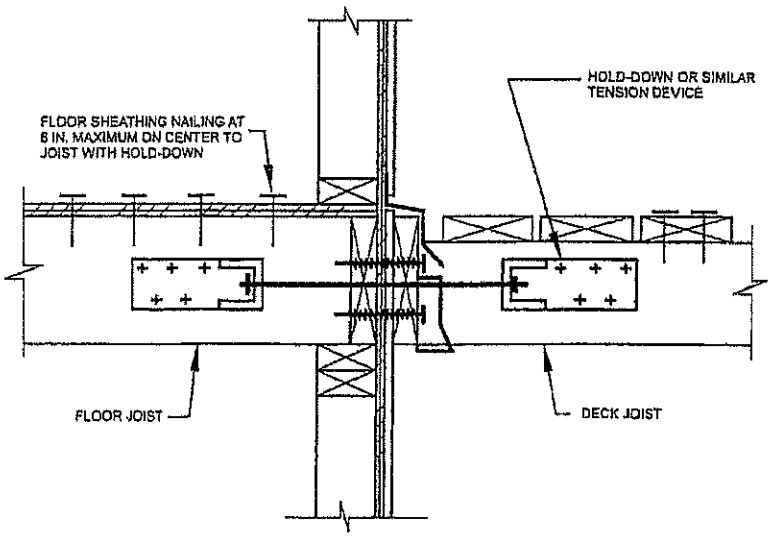

For SI: 1 inch = 25 4 mm

FIGURE R502.2.2.3
DECK ATTACHMENT FOR LATERAL LOADS

R502.3 Allowable joist spans. Spans for floor joists shall be in accordance with Tables R502.3.1(1) and R502 3 1(2). For other grades and species and for other loading conditions, refer to the AF&PA Span Tables for Joists and Rafters

R502.3.1 Sleeping areas and attic joists. Table R502 3.1(1) shall be used to determine the maximum allowable span of floor joists that support sleeping areas and *attics* that are accessed by means of a fixed stairway in accordance with Section R311.7 provided that the design live load does not exceed 30 pounds per square foot (1 44 kPa) and the design dead load does not exceed 20 pounds per square foot (0.96 kPa) The allowable span of ceiling joists that support *attics* used for limited storage or no storage shall be determined in accordance with Section R802.4

TABLE R502.3.1(2)
FLOOR JOIST SPANS FOR COMMON LUMBER SPECIES
(Residential living areas, live load = 40 psf, L/Δ = 360)

JOIST SPACING (Inches)	SPECIE AND GRADE		DEAD LOAD = 10 psf				DEAD LOAD = 20 psf			
			2x6	2x8	2x10	2x12	2x6	2x8	2x10	2x12
			Maximum floor joist spans							
			(ft.- in.)	(ft.- in.)	(ft.- in.)	(ft.- in.)	(ft.- in.)	(ft.- in.)	(ft.- in.)	(ft.- in.)
12	Douglas fir-larch	SS	11- 4	15- 0	19- 1	23- 3	11- 4	15- 0	19- 1	23- 3
	Douglas fir-larch	#1	10-11	14- 5	18- 5	22- 0	10-11	14- 2	17- 4	20- 1
	Douglas fir-larch	#2	10- 9	14- 2	17- 9	20- 7	10- 6	13- 3	16- 3	18-10
	Douglas fir-larch	#3	8- 8	11- 0	13- 5	15- 7	7-11	10- 0	12- 3	14- 3
	Hem-fir	SS	10- 9	14- 2	18- 0	21-11	10- 9	14- 2	18- 0	21-11
	Hem-fir	#1	10- 6	13-10	17- 8	21- 6	10- 6	13-10	16-11	19- 7
	Hem-fir	#2	10- 0	13- 2	16-10	20- 4	10- 0	13- 1	16- 0	18- 6
	Hem-fir	#3	8- 8	11- 0	13- 5	15- 7	7-11	10- 0	12- 3	14- 3
	Southern pine	SS	11- 2	14- 8	18- 9	22-10	11- 2	14- 8	18- 9	22-10
	Southern pine	#1	10-11	14- 5	18- 5	22- 5	10-11	14- 5	18- 5	22- 5
	Southern pine	#2	10- 9	14- 2	18- 0	21- 9	10- 9	14- 2	16-11	19-10
	Southern pine	#3	9- 4	11-11	14- 0	16- 8	8- 6	10-10	12-10	15- 3
	Spruce-pine-fir	SS	10- 6	13-10	17- 8	21- 6	10- 6	13-10	17- 8	21- 6
	Spruce-pine-fir	#1	10- 3	13- 6	17- 3	20- 7	10- 3	13- 3	16- 3	18-10
	Spruce-pine-fir	#2	10- 3	13- 6	17- 3	20- 7	10- 3	13- 3	16- 3	18-10
	Spruce-pine-fir	#3	8- 8	11- 0	13- 5	15- 7	7-11	10- 0	12- 3	14- 3
16	Douglas fir-larch	SS	10- 4	13- 7	17- 4	21- 1	10- 4	13- 7	17- 4	21- 0
	Douglas fir-larch	#1	9-11	13- 1	16- 5	19- 1	9- 8	12- 4	15- 0	17- 5
	Douglas fir-larch	#2	9- 9	12- 7	15- 5	17-10	9- 1	11- 6	14- 1	16- 3
	Douglas fir-larch	#3	7- 6	9- 6	11- 8	13- 6	6-10	8- 8	10- 7	12- 4
	Hem-fir	SS	9- 9	12-10	16- 5	19-11	9- 9	12-10	16- 5	19-11
	Hem-fir	#1	9- 6	12- 7	16- 0	18- 7	9- 6	12- 0	14- 8	17- 0
	Hem-fir	#2	9- 1	12- 0	15- 2	17- 7	8-11	11- 4	13-10	16- 1
	Hem-fir	#3	7- 6	9- 6	11- 8	13- 6	6-10	8- 8	10- 7	12- 4
	Southern pine	SS	10- 2	13- 4	17- 0	20- 9	10- 2	13- 4	17- 0	20- 9
	Southern pine	#1	9-11	13- 1	16- 9	20- 4	9-11	13- 1	16- 4	19- 6
	Southern pine	#2	9- 9	12-10	16- 1	18-10	9- 6	12- 4	14- 8	17- 2
	Southern pine	#3	8- 1	10- 3	12- 2	14- 6	7- 4	9- 5	11- 1	13- 2
	Spruce-pine-fir	SS	9- 6	12- 7	16- 0	19- 6	9- 6	12- 7	16- 0	19- 6
	Spruce-pine-fir	#1	9- 4	12- 3	15- 5	17-10	9- 1	11- 6	14- 1	16- 3
	Spruce-pine-fir	#2	9- 4	12- 3	15- 5	17-10	9- 1	11- 6	14- 1	16- 3
	Spruce-pine-fir	#3	7- 6	9- 6	11- 8	13- 6	6-10	8- 8	10- 7	12- 4
19.2	Douglas fir-larch	SS	9- 8	12-10	16- 4	19-10	9- 8	12-10	16- 4	19- 2
	Douglas fir-larch	#1	9- 4	12- 4	15- 0	17- 5	8-10	11- 3	13- 8	15-11
	Douglas fir-larch	#2	9- 1	11- 6	14- 1	16- 3	8- 3	10- 6	12-10	14-10
	Douglas fir-larch	#3	6-10	8- 8	10- 7	12- 4	6- 3	7-11	9- 8	11- 3
	Hem-fir	SS	9- 2	12- 1	15- 5	18- 9	9- 2	12- 1	15- 5	18- 9
	Hem-fir	#1	9- 0	11-10	14- 8	17- 0	8- 8	10-11	13- 4	15- 6
	Hem-fir	#2	8- 7	11- 3	13-10	16- 1	8- 2	10- 4	12- 8	14- 8
	Hem-fir	#3	6-10	8- 8	10- 7	12- 4	6- 3	7-11	9- 8	11- 3
	Southern pine	SS	9- 6	12- 7	16- 0	19- 6	9- 6	12- 7	16- 0	19- 6
	Southern pine	#1	9- 4	12- 4	15- 9	19- 2	9- 4	12- 4	14-11	17- 9
	Southern pine	#2	9- 2	12- 1	14- 8	17- 2	8- 8	11- 3	13- 5	15- 8
	Southern pine	#3	7- 4	9- 5	11- 1	13- 2	6- 9	8- 7	10- 1	12- 1
	Spruce-pine-fir	SS	9- 0	11-10	15- 1	18- 4	9- 0	11-10	15- 1	17- 9
	Spruce-pine-fir	#1	8- 9	11- 6	14- 1	16- 3	8- 3	10- 6	12-10	14-10
	Spruce-pine-fir	#2	8- 9	11- 6	14- 1	16- 3	8- 3	10- 6	12-10	14-10
	Spruce-pine-fir	#3	6-10	8- 8	10- 7	12- 4	6- 3	7-11	9- 8	11- 3
24	Douglas fir-larch	SS	9- 0	11-11	15- 2	18- 5	9- 0	11-11	14- 9	17- 1
	Douglas fir-larch	#1	8- 8	11- 0	13- 5	15- 7	7-11	10- 0	12- 3	14- 3
	Douglas fir-larch	#2	8- 1	10- 3	12- 7	14- 7	7- 5	9- 5	11- 6	13- 4
	Douglas fir-larch	#3	6- 2	7- 9	9- 6	11- 0	5- 7	7- 1	8- 8	10- 1
	Hem-fir	SS	8- 6	11- 3	14- 4	17- 5	8- 6	11- 3	14- 4	16-10
	Hem-fir	#1	8- 4	10- 9	13- 1	15- 2	7- 9	9- 9	11-11	13-10
	Hem-fir	#2	7-11	10- 2	12- 5	14- 4	7- 4	9- 3	11- 4	13- 1
	Hem-fir	#3	6- 2	7- 9	9- 6	11- 0	5- 7	7- 1	8- 8	10- 1
	Southern pine	SS	8-10	11- 8	14-11	18- 1	8-10	11- 8	14-11	18- 1
	Southern pine	#1	8- 8	11- [illegible]	14- 7	17- 5	8- 8	11- 3	13- 4	15-11
	Southern pine	#2	8- 6	11- 0	13- 1	15- 5	7- 9	10- 0	12- 0	14- 0
	Southern pine	#3	6- 7	8- 5	9-11	11-10	6- 0	7- 8	9- 1	10- 9
	Spruce-pine-fir	SS	8- 4	11- 0	14- 0	17- 0	8- 4	11- 0	13- 8	15-11
	Spruce-pine-fir	#1	8- 1	10- 3	12- 7	14- 7	7- 5	9- 5	11- 6	13- 4
	Spruce-pine-fir	#2	8- 1	10- 3	12- 7	14- 7	7- 5	9- 5	11- 6	13- 4
	Spruce-pine-fir	#3	6- 2	7- 9	9- 6	11- 0	5- 7	7- 1	8- 8	10- 1

NOTE: Check sources for availability of lumber in lengths greater than 20 feet.

For SI: 1 inch = 25.4 mm, 1 foot = 308.4 mm, 1 pound per square foot = 0.0479 kN/m^2

a End bearing length shall be increased to 2 inches

20' 6"
- 1'
1'
2'8"

Dillman & Upton

Exterior Use #1 SYP Pressure Treated Lumber Span Table
for
Interior Beams 10' + ' AVGE 8' W

Beam Size	Beam Spacing, ft. 6	7	8	9	10	11	12	14	16
2-2x6	6'- 10"	6'- 4"	5'- 8"	5'- 2"	4'- 9"	4'- 4"	4'- 1"	3'- 7"	3'- 3"
3-2x6	8'- 4"	7'- 9"	7'- 3"	6'- 10"	6'- 6"	6'- 1"	5'- 8"	5'- 0"	4'- 6"
2-2x8	8'- 7"	7'- 11"	7'- 5"	6'- 10"	6'- 3"	5'- 9"	5'- 5"	4'- 9"	4'- 4"
3-2x8	10'- 6"	9'- 9"	9'- 1"	8'- 7"	8'- 2"	7'- 9"	7'- 5"	6'- 7"	5'- 11"
2-2x10	10'- 2"	9'- 5"	8'- 10"	8'- 4"	7'- 11"	7'- 4"	6'- 11"	6'- 1"	5'- 6"
3-2x10	12'- 6"	11'- 7"	10'- 10"	10'- 2"	9'- 8"	9'- 3"	8'- 10"	8'- 2"	7'- 7"
2-2x12	12'- 2"	11'- 3"	10'- 7"	9'- 11"	9'- 5"	9'- 0"	8'- 5"	7'- 5"	6'- 9"
3-2x12	14'- 11"	13'- 10"	12'- 11"	12'- 2"	11'- 7"	11'- 0"	10'- 7"	9'- 9"	9'- 2"

Dillman & Upton

Exterior Use #1 SYP Pressure Treated Lumber Span Table
for
Edge Beams

Beam Size	Beam Spacing, ft. 6	7	8	9	10	11	12	14	16
2-2x6	7'- 3"	6'- 11"	6'- 8"	6'- 5"	6'- 3"	5'- 11"	5'- 7"	5'- 1"	4'- 8"
3-2x6	8'- 8"	8'- 5"	8'- 2"	7'- 11"	7'- 8"	7'- 5"	7'- 2"	6'- 9"	6'- 5"
2-2x8	9'- 1"	8'- 9"	8'- 5"	8'- 1"	7'- 10"	7'- 7"	7'- 4"	6'- 8"	6'- 2"
3-2x8	11'- 2"	10'- 9"	10'- 4"	9'- 11"	9'- 7"	9'- 4"	9'- 0"	8'- 6"	8'- 1"
2-2x10	10'- 10"	10'- 5"	10'- 0"	9'- 8"	9'- 4"	9'- 0"	8'- 9"	8'- 3"	7'- 10"
3-2x10	13'- 3"	12'- 9"	12'- 3"	11'- 10"	11'- 5"	11'- 1"	10'- 9"	10'- 2"	9'- 7"
2-2x12	12'- 11"	12'- 5"	11'- 11"	11'- 6"	11'- 1"	10'- 9"	10'- 5"	9'- 10"	9'- 4"
3-2x12	15'- 10"	15'- 2"	14'- 8"	14'- 1"	13'- 7"	13'- 2"	12'- 9"	12'- 1"	11'- 8"

- These tables are based upon a 40 psf live load and a 10 psf dead load.
- The live load deflection is limited to L/360 and the total load deflection is limited to L/240.
- Wet service factors were used to develop these tables.
- These tables are based upon the 1991 Edition of the "National Design Specification for Wood Construction".
- The edge beam table assumes the joists cantilever 24" over the beam.
- These tables were developed for office use only at Dillman & Upton.

Copyright 1996. Sheppard Engineering, Inc

S.E.I. JOB #96-461-A 3/28/96 FINAL VERSION