## PLANT NOTES:

1. PLANT MATERIALS SHALL BE SOUND, HEALTHY, VIGOROUS, FREE FROM PLANT DISEASES AND INSECTS OR THEIR EGGS, AND SHALL HAVE NORMAL, HEALTHY ROOT SYSTEMS. CALIPER MEASUREMENTS SHALL BE TAKEN 6" ABOVE THE GROUND LEVEL. ALL OTHER MEASUREMENTS SHALL BE IN ACCORDANCE WITH THE LATEST EDITION OF "AMERICAN STANDARD FOR NURSERY STOCK" (ANSI Z-60.1 + A300 2004.)
2. PLANTING POCKETS SHALL BE DUG SO THAT THE POCKET DIAMETER IS A MINIMUM OF 4 FEET WIDER LARGER THAN THE ROOT BALL AND THE SIDES OF POCKET ARE VERTICAL AND FRACTURED. INDIGENOUS SOILS SHALL BE TAMPED AND WATERED DURING BACK FILLING PROCEDURE.
3. PLANTING POCKETS SHALL BE NO DEEPER THAN THE HEIGHT OF THE ROOT BALL, SAUCER SHALL BE MADE ON THE EDGES OF PLANTING POCKET.
4. ALL TREE WRAPPING SHALL BE REMOVED UPON PLANTING.
5. MULCH SHALL BE GROUND OR SHREDDED HARDWOOD BARK, FREE FROM DELETERIOUS MATERIALS AND SUITABLE AS A TOP DRESSING OF PLANTING BEDS AND INDIVIDUAL TREE PLANTINGS.
6. TREES SHALL BE MULCHED WITH MIN. 3" DEEP HARDWOOD BARK MULCH 30" DIAMETER CIRCLE AROUND THE TREE.
7. SHRUBS SHALL BE MULCHED IN BEDS ACCORDING WITH THE DETAIL ON THIS SHEET. MULCH SHALL BE MIN. 3" DEEP HARDWOOD BARK. SEE LANDSCAPE PLAN FOR LOCATION OF PLANTING BEDS. SEE PLANTING DETAILS FOR INDIVIDUAL PLANTINGS.
8. PLANTS SHALL BE GUARANTEED FOR TWO COMPLETE GROWING SEASONS (24 MONTHS). DEAD MATERIALS SHALL BE REPLACED AS NEEDED PRIOR TO THE EXPIRATION OF THE GUARANTEE PERIOD, IN ACCORDANCE WITH THE LOCAL ORDINANCE REQUIREMENTS.
9. CONTRACTOR SHALL PROVIDE IN WRITING A LIST OF RECOMMENDED MAINTENANCE PROCEDURES FOR THE FIRST TWO GROWING SEASON.
10. REMOVE TOP 1/3 OF BURLAP ON ROOT BALL OR ALL IF WRAPPED IN PLASTIC COVERING AND/OR ALL NYLON CORD.
11. PLANT MATERIALS SHALL BE USED IN COMPLIANCE WITH THE PROVISIONS OF THE LOCAL ORDINANCE AND SHALL BE NURSERY GROWN, FREE OF PESTS AND DISEASES, HARDY IN THIS COUNTY, IN CONFORMANCE WITH THE STANDARDS OF THE AMERICAN ASSOCIATION OF NURSERYMEN, AND SHALL HAVE PASSED INSPECTIONS REQUIRED UNDER STATE REGULATIONS. A COPY WHICH SHALL BE KEPT ON FILE WITH THE PLANNING OFFICIAL.
12. SEED SHALL BE CERTIFIED TURF GRASS SEED COMPLYING WITH AMERICAN SOD PRODUCERS ASSOCIATION SPECIFICATION AND FREE OF WEEDS SEEDS AND UNDESIRABLE NATIVE GRASSES. SEEDED AREAS SHALL NOT BE PERMITTED TO DRY OUT. ALL LAWN AREAS SHALL BE FERTILIZED AND WATERED AS REQUIRED DURING THE FIRST GROWING SEASON TO MAINTAIN A DENSE AND VIGOROUS GROWING LAWN.
13. PLANTING BED SOIL FOR ANNUALS SHALL BE SCREENED TOPSOIL. TO DETER WEED GROWTH DURING THE ESTABLISHMENT OF ANNUAL & PERANNIAL BED, APPLY A PRE-EMERGENT ('PREEN' OR EQUAL) AFTER PLANTING ANNUALS, 2-3 TIMES PER GROWING SEASON, AT A RATE AS PER RECOMMENDATION OF PRODUCT MANUFACTURER.

## GENERAL NOTES:

1. ALL CONSTRUCTION SHALL CONFORM TO THE CURRENT STANDARDS AND SPECIFICATIONS OF THE CHARTER TOWNSHIP OF OXFORD.
2. ALL AREAS NOT BUILT, LANDSCAPED, OR PAVED UPON SHALL BE SEEDED OR SODDED. TERRA SEED SYSTEM OR APPROVED EQUAL IS ENCOURAGED.
3. ALL LAWN AREAS SHALL BE IRRIGATED WITH AN UNDERGROUND, AUTOMATIC IRRIGATION SYSTEM. IRRIGATION HEADS SHALL BE PLACED SUCH THAT WATER WILL NOT HIT ANY HARD STRUCTURES OR SURFACES.
4. TWO YEAR GUARANTEE PERIOD BEGINS AT FINAL INSPECTION OF LANDSCAPE MATERIAL BY THE TOWNSHIPS REPRESENATIVE A LANDSCAPE ARCHITECT OR NURSERYMAN, AND PRIOR TO THE AUTHORIZATION OF THE OCCUPANCY PERMIT. THIS IS THE FIRST OF TWO REQUIRED CITY INSPECTIONS OF THE LANSCAPE PLAN INSTALLATION.
5. BUILDING DEPARTMENT WILL NOT RELEASE CONSTRUCTION BONDS UNTIL CITY APPROVED LANDSCAPE ARCHITECT OR NURSERYMAN HAS INSPECTED THE SITE AND APPROVED THE INSTALLATION OF LANDSCAPE PLANS. FINAL BOND WILL NOT BE RELEASED UNTIL THE TWO YEAR GUARANTEE EXPIRES AND FINAL INSPECTION IS MADE.
6. OWNER IS THEN RESPONSIBLE FOR CARE AND MAINTENANCE OF ALL PLANTS UPON RETURN OF BONDS. ALL PLANT MATERIAL IS TO BE MAINTAINED FOR THE NATURAL LIFE OF THE PLANT. NO REMOVAL OF ANY PLANT MATERIAL IS PERMITTED WITHOUT REPLACEMENT.

## LANDSCAPE CONTRACTOR'S "TWO-YEAR IRRIGATION REQUIREMENT PERIOD"

IT SHALL BE THE RESPONSIBILITY OF THE LANDSCAPE CONTRACTOR TO PROGRAM AND PERIODICALLY ADJUST THE IRRIGATION SYSTEM (PROVIDED BY OTHERS) AS REQUIRED TO INSURE DELIVERY OF PROPER AND ADEQUATE WATER SUPPLY TO ALL PLANT MATERIALS, SEEDED LAWN AREAS (SERVICED BY THE IRRIGATION SYSTEM) TO INSURE THE ESTABLISHMENT OF HEALTHY PLANT MATERIALS AND LAWNS FOR THEIR FIRST YEAR OF GROWTH. FOLLOWING THE LANDSCAPE CONTRACTOR'S "TWO-YEAR IRRIGATION REQUIREMENT PERIOD". THE LANDSCAPE CONTRACTOR SHALL PROVIDE THE OWNER WITH A SUGGESTED "IRRIGATION MAINTENANCE SCHEDULE" FOR HIS USE.

## LAWN SEED MIX:

*30% PERENNIAL RYGRASS*
*20% PARK KENTUCKY BLUEGRASS*
*45% CREEPING RED FESCUE*
*5% ANNUAL RYEGRASS*

*4#/1000 S.F. SEEDING RATE*

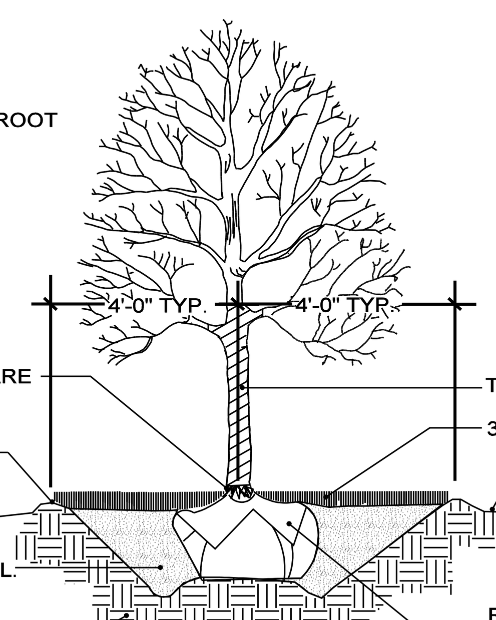


DECIDUOUS TREE PLANTING DETAIL
NO SCALE

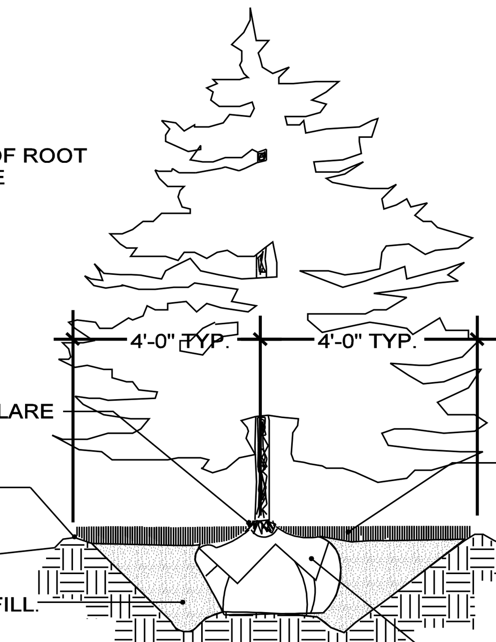


EVERGREEN TREE PLANTING DETAIL
NO SCALE

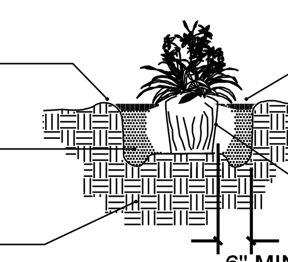


PERENNIAL PLANTING DETAIL
NO SCALE

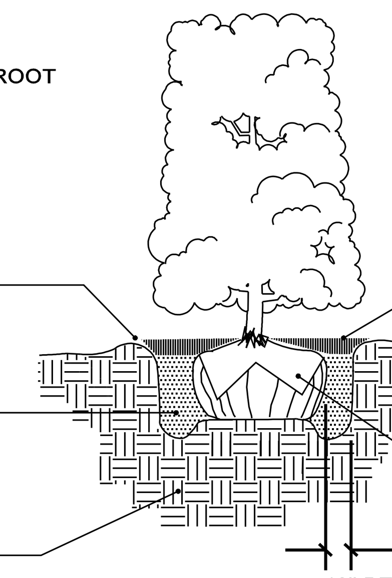


SHRUB HEDGE PLANTING DETAIL
NO SCALE

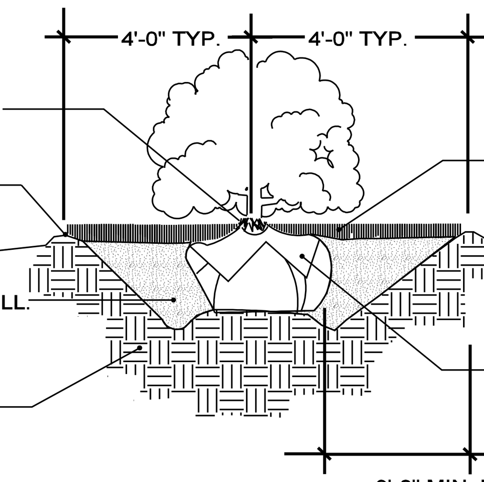


SHRUB PLANTING DETAIL
NO SCALE

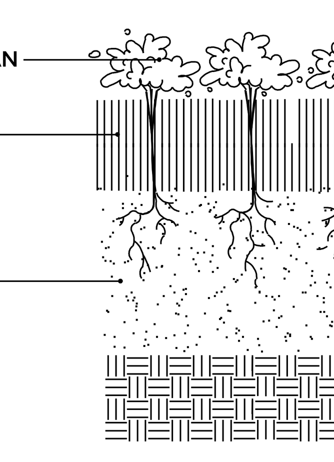


GROUNDCOVER PLANTING DETAIL
NO SCALE

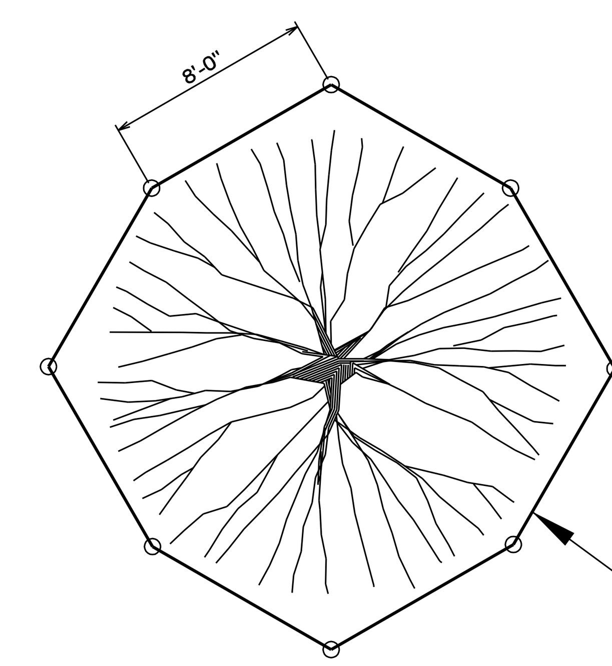


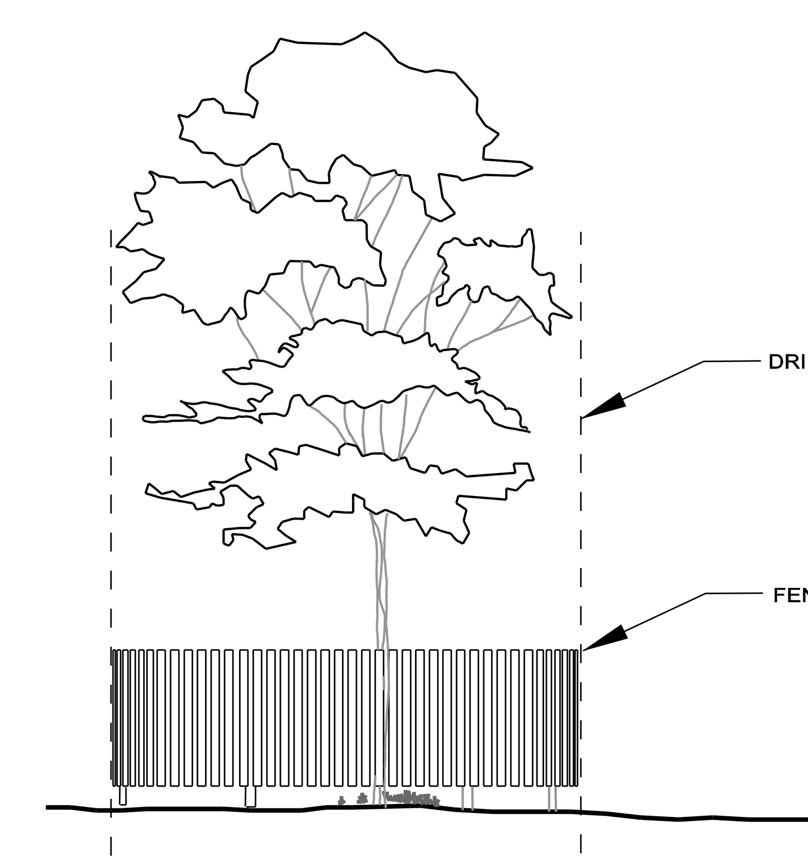


EXISTING TREE PROTECTION DETAIL
NO SCALE

REVISION:

DATE:


Terms and Conditions for Electronic Data:
This document is provided in electronic format for the referenced project. It is understood and agreed that any use or reuse of original or altered files willbe at the user's own risk and legalresponsibility. It is also agreed that the electronic files provided by Giffels-Webster Engineers, Inc. (GWE) are being provided for generalinformation purposes only. Neither the electronic files nor any CAD versions are to be relied on for construction layout purposes. The user expressly indemnifies and holds GWE harmless for any and allclaims, suits, liability, demands or other costs arising out of or resulting from the unauthorized use of these materials. GWE makes no representation as to the accuracy of the information provided by the electronic media. Data on electronic media can deteriorate or be modified without the knowledge of GWE. Electronic media viruses are increasing in complexity and growth. GWE advises allusers to scan any disc received from outside sources with a current antivirus program. It is understood and agreed that GWE willnot be responsible for any damage caused by such a virus. If any virus is detected by your system on any media received from GWE it is your responsibility to contact us immediately.


72 HOURS
(3 WORKING DAYS)
BEFORE YOU DIG
CALL MISS DIG
800-482-7171
(TOLL FREE)

| | |
|---|---|
| PRINCIPAL: | KM |
| PROJ. MNGR: | JS |
| DESIGN: | MH |
| DRAWN: | DN |
| IND. REVIEW: | MH |

PROFESSIONAL SEAL

DEVELOPED FOR:


Giffels-Webster Engineers, Inc.
ENGINEERS–LAND SURVEYORS
PLANNERS–LANDSCAPE ARCHITECTS
2871 BOND STREET
ROCHESTER HILLS, MI 48309
PHONE (248) 852-3100
FAX (248) 852-6372
407 E. FORT STREET, SUITE 600
DETROIT, MI 48226
PHONE (313) 962-4442
FAX (313) 962-5068
6303 26 MILE ROAD, SUITE 100
WASHINGTON, MI 48094
PHONE (586) 781-8950
FAX (586) 781-8951
EMAIL info@giffelswebster.com
www.giffelswebster.com


SHEET TITLE:

# LANDSCAPE DETAILS

| | |
|---|---|
| DATE: | 01/01/2008 |
| SCALE: | No Scale |
| SHEET: | 1 OF 1 |
| JOB: | 17356.01 |


Copyright © 2008 Giffels-Webster Engineers, Inc. No reproduction shall be made without the prior written consent of Giffels-Webster Engineers, Inc.

# PRIVATE ROAD SECTIONS

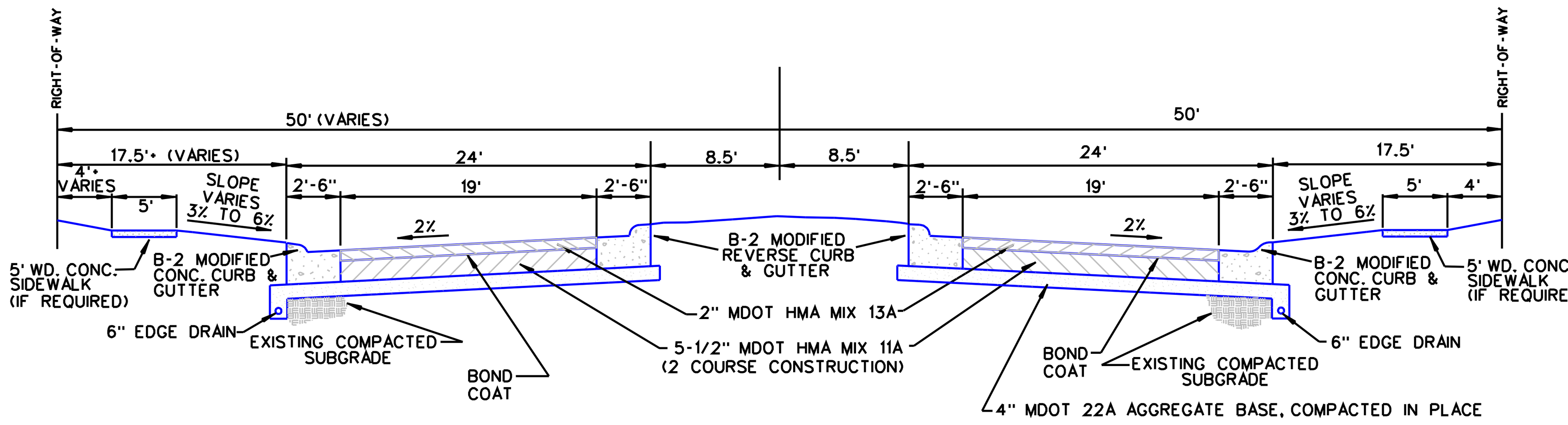


NOTES:
1. COMPACT HMA TO 97% MARSHAL METHOD.
2. COMPACT 12" BASE AND SUBGRADE TO AT LEAST 95% MAXIMUM DRY DENSITY IN ACCORDANCE WITH ASTM D1557 (MODIFIED PROCTOR).

## BOULEVARD
NOT TO SCALE

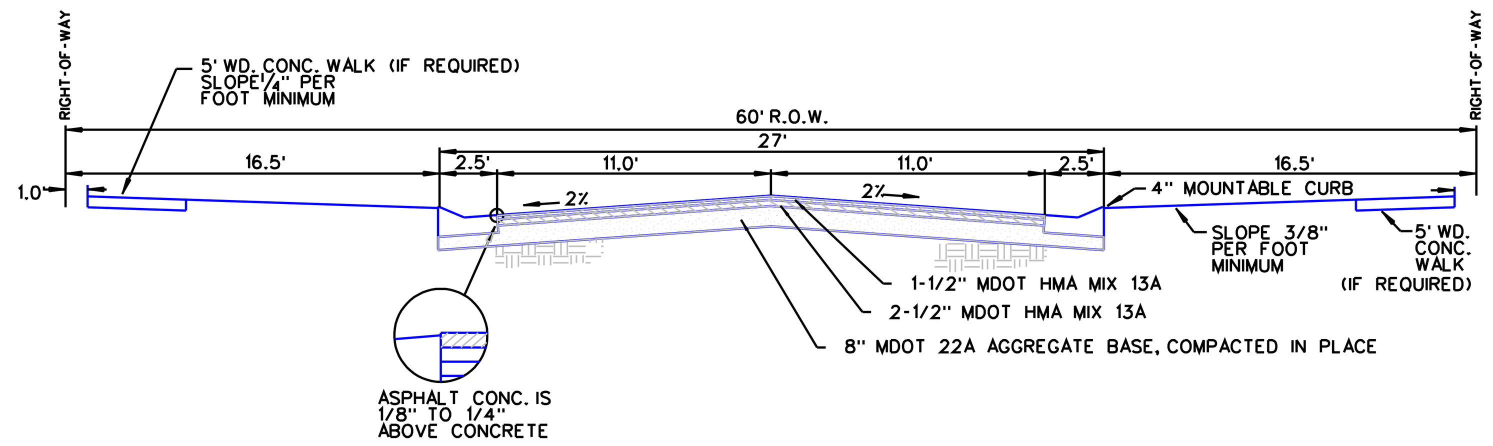


NOTES:
1. COMPACT HMA TO 97% MARSHAL METHOD.
2. COMPACT 12" BASE AND SUBGRADE TO AT LEAST 95% MAXIMUM DRY DENSITY IN ACCORDANCE WITH ASTM D1557 (MODIFIED PROCTOR).

## HMA STREET SECTION
NOT TO SCALE

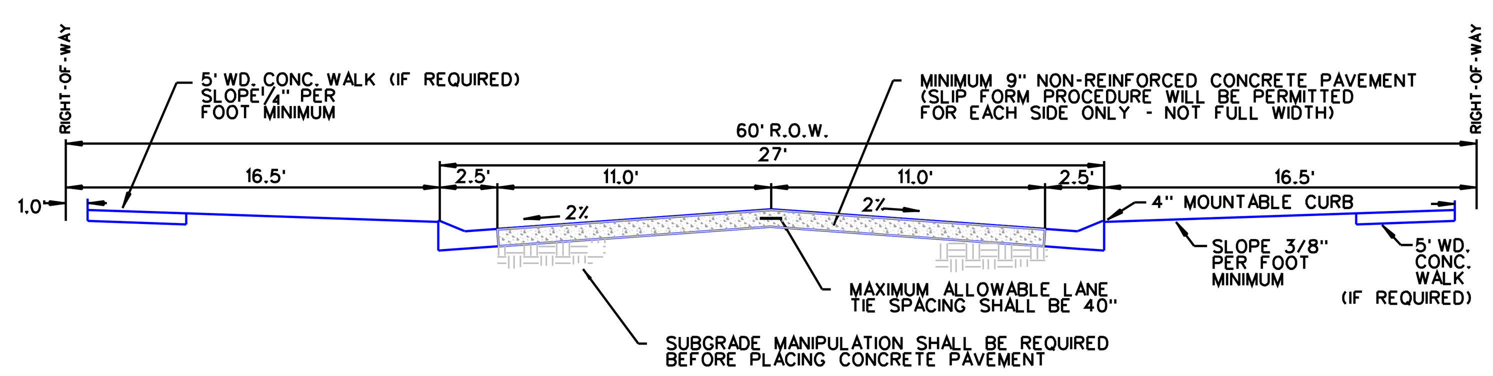


## CONCRETE STREET
NOT TO SCALE

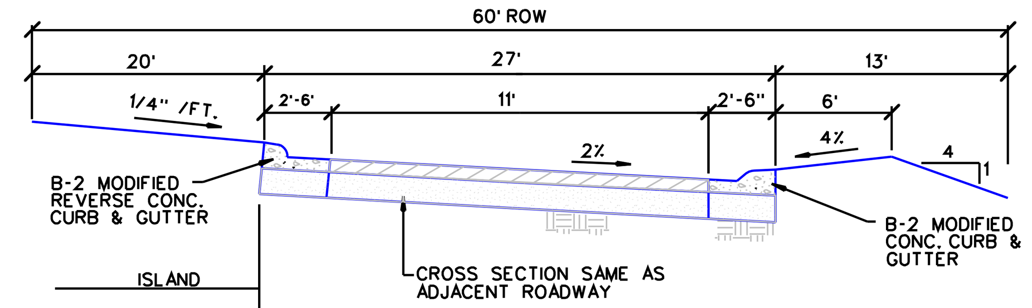


## RESIDENTIAL CUL DE SAC
NOT TO SCALE

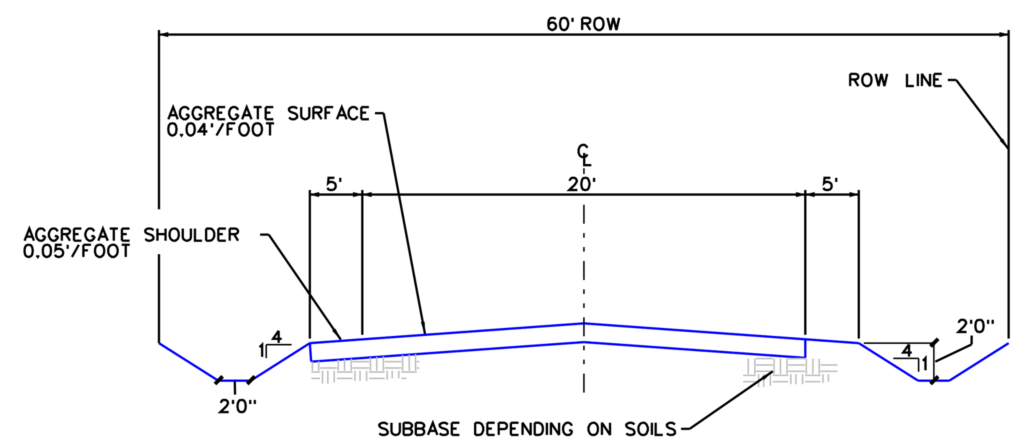


| TYPE OF NATIVE SOILS | MDOT CLASS II SUBBASE | MDOT 22A AGGREGATE SURFACING |
|---|---|---|
| SAND | ---- | 8" |
| CLAY | 8" | 8" |
| SILT | 12" | 8" |

## GRAVEL ROAD
NOT TO SCALE

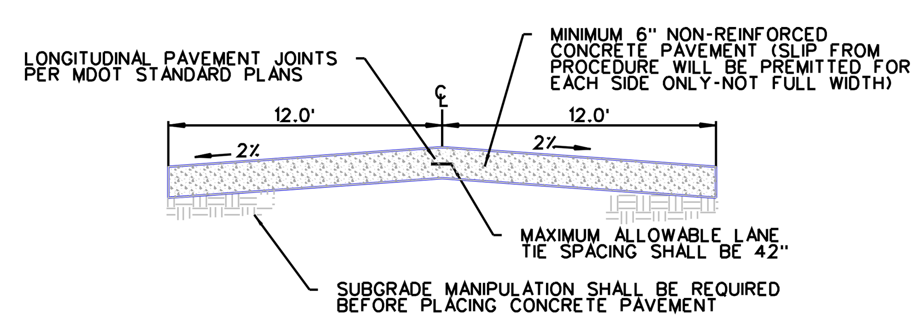


## CONCRETE SERVICE DRIVE
NOT TO SCALE

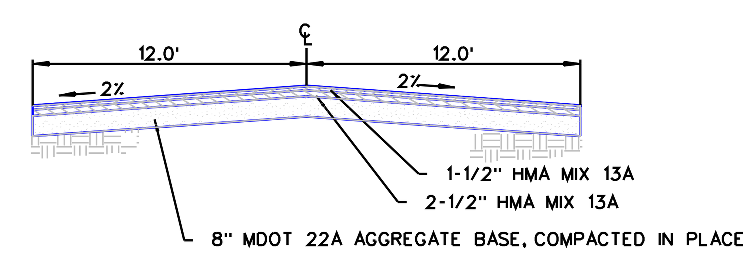


NOTES:
1. COMPACT HMA TO 97% MARSHALL METHOD
2. COMPACT 12" BASE AND SUBGRADE TO AT LEAST 95% MAXIMUM DRY DENSITY IN ACCORDANCE WITH ASTM D1557 (MODIFIED PROCTOR).

## HMA SERVICE DRIVE
NOT TO SCALE

# PARKING LOT CROSS SECTIONS

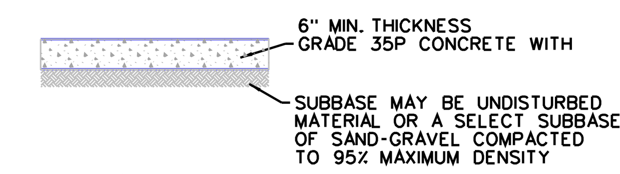


## CLASS A CONCRETE
NOT TO SCALE

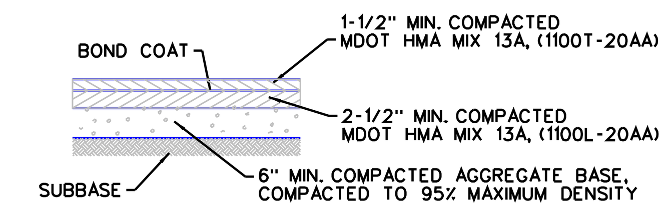


## CLASS A HMA
NOT TO SCALE

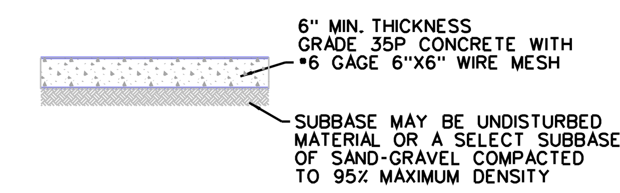


## CLASS B CONCRETE
NOT TO SCALE

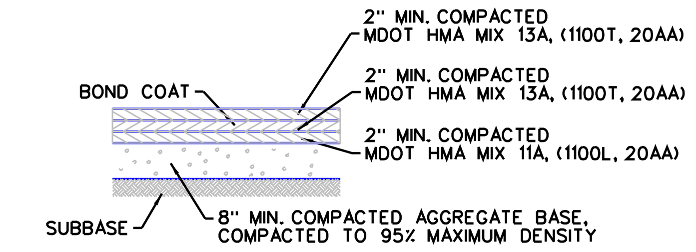


NOTES:
1. 4" MDOT HMA MIX 13A (TWO LIFTS) ON 12" COMPACTED AGGREGATE BASE WILL ALSO BE ACCEPTED.

## CLASS B HMA
NOT TO SCALE

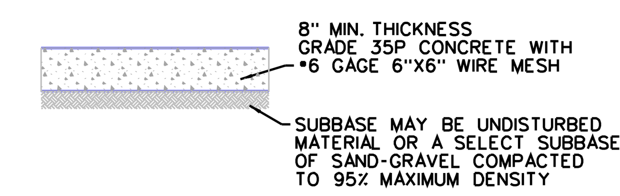


## CLASS C CONCRETE
NOT TO SCALE

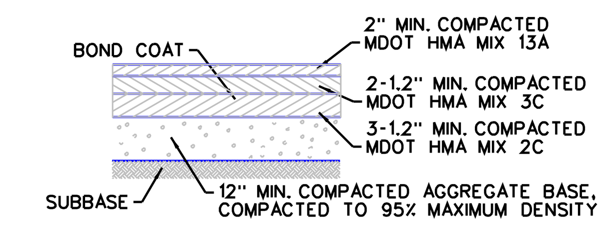


## CLASS C HMA
NOT TO SCALE

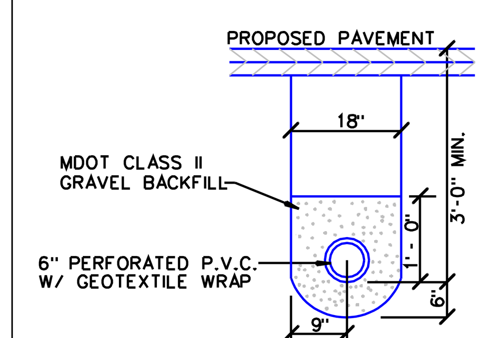


## UNDERDRAIN DETAIL
NOT TO SCALE

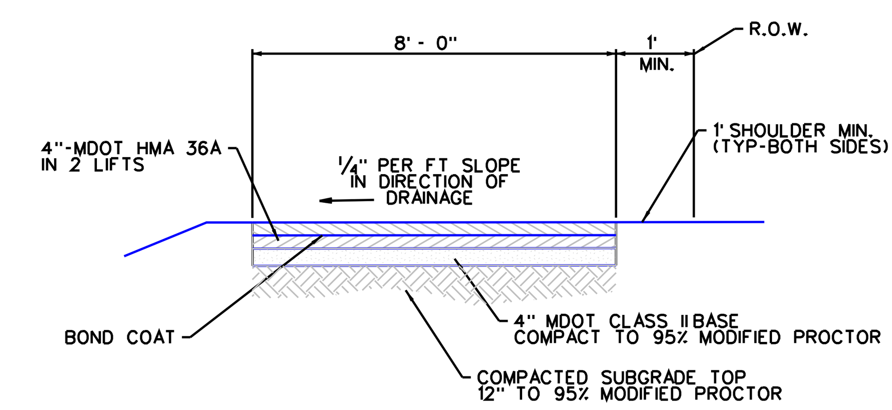


NOTES:
1. PRAMITOL "C" SOIL STERMILANT SHALL BE APPLIED TO THE SUBGRADE PRIOR TO HMA PLACEMENT.
2. COMPACT HMA 36A TO 97% MARSHALL METHOD.
3. COMPACT 12" BASE AND SUBGRADE TO AT LEAST 95% MAXIMUM DRY DENSITY IN ACCORDANCE WITH ASTM D1557 (MODIFIED PROCTOR).
4. PROVIDE AT LEAST 3' CLEARANCE FROM EDGE OF PATH TO DITCH BACKS, STANDING OBJECTS, DROP OFFS, WATER, ETC.

## SAFETY PATH
NOT TO SCALE

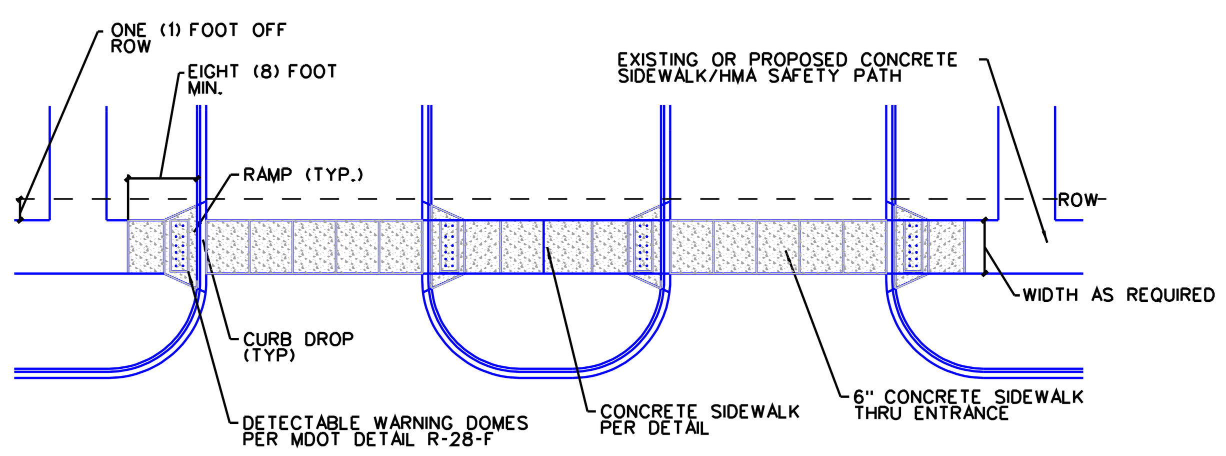


## SIDEWALK AT BOULEVARD ENTRANCE
NOT TO SCALE

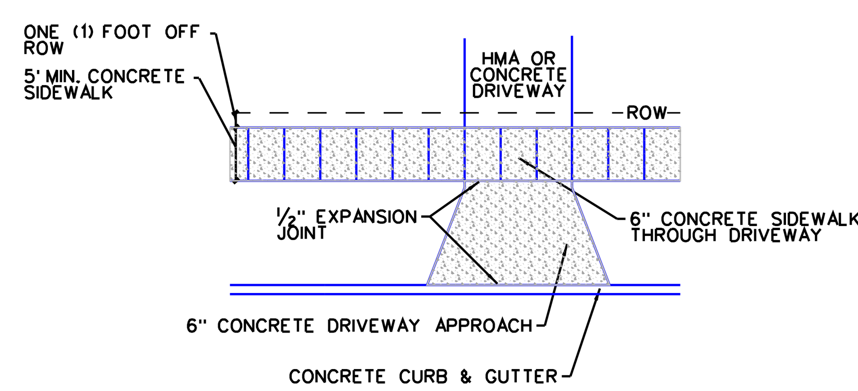


## SIDEWALK AT RESIDENTIAL DRIVEWAY
NOT TO SCALE

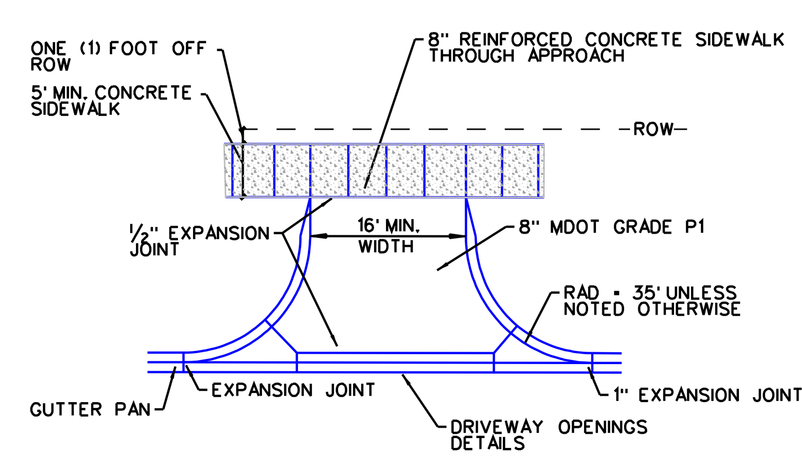


## COMMERICAL OR INDUSTRIAL APPROACH
NOT TO SCALE

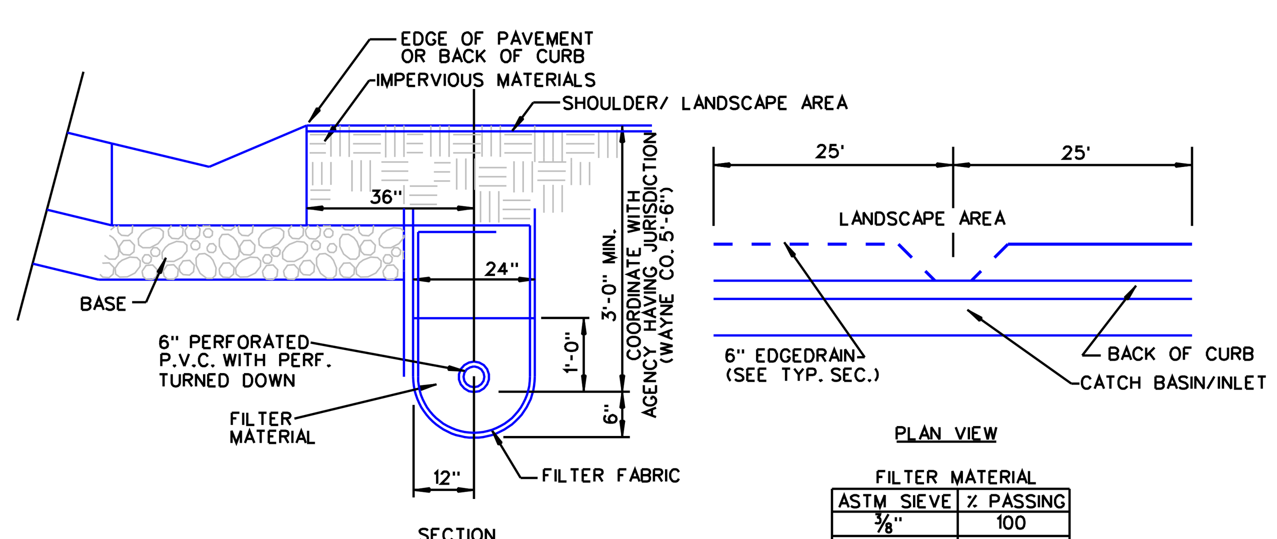


FILTER MATERIAL

| ASTM SIEVE | % PASSING |
|---|---|
| 3/8" | 100 |
| NO. 4 | 95-100 |
| NO. 16 | 45-50 |
| NO. 50 | 10-30 |
| NO. 100 | 2-10 |

## EDGEDRAIN DETAIL
NOT TO SCALE

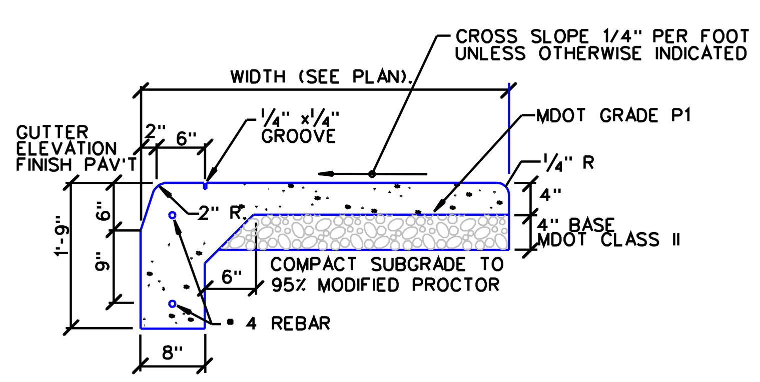


NOTES:
1. EXPANSION JOINTS: 1/2" WIDE, FULL DEPTH, AT 50' INTERVALS TRANSVERSELY, AROUND EMBEDDED ITEMS SUCH AS LIGHT BASES, AND AT ABUTTING STRUCTURES SUCH AS BUILDINGS OR CURBS.
2. CONTRACTION JOINTS: 1/4" WIDE, 1" DEEP, ARRANGE TO FORM PANELS 6' MAX. IN EITHER DIRECTION.

## INTEGRAL CURB & WALK
NOT TO SCALE

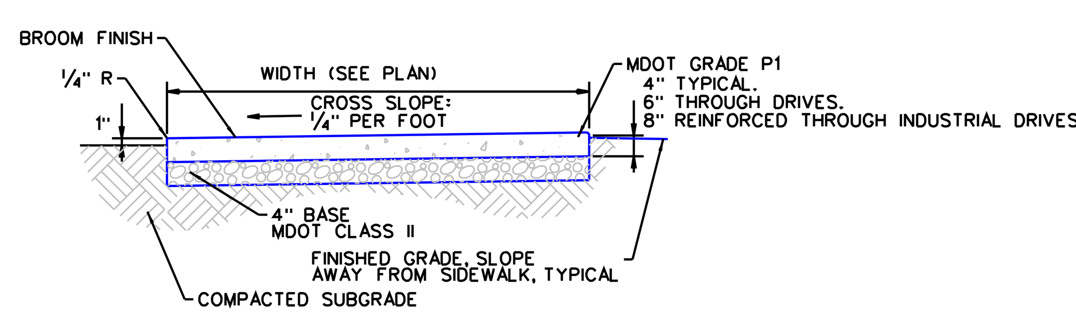


NOTES:
1. EXPANSION JOINTS: 1/2" WIDE, FULL DEPTH, AT 50' INTERVALS TRANSVERSELY, AROUND EMBEDDED ITEMS SUCH AS LIGHT BASES, AND AT ABUTTING STRUCTURES SUCH AS BUILDINGS OR CURBS.
2. CONTRACTION JOINTS: 1/4" WIDE, 1" DEEP, ARRANGE TO FORM PANELS 6' MAX. IN EITHER DIRECTION.
2. CONTRACTION JOINTS: 1/4" WIDE, 1" DEEP, ARRANGE TO FORM PANELS 6' MAX. IN EITHER DIRECTION.

## CONCRETE SIDEWALK
NOT TO SCALE

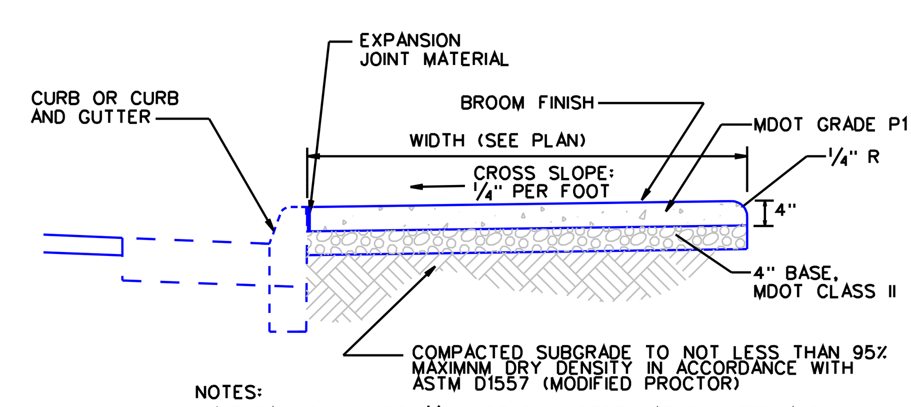


NOTES:
1. EXPANSION JOINTS: 1/2" WIDE, FULL DEPTH, AT 50' INTERVALS TRANSVERSELY, AROUND EMBEDDED ITEMS SUCH AS LIGHT BASES, AND AT ABUTTING STRUCTURES SUCH AS BUILDINGS OR CURBS.
2. CONTRACTION JOINTS: 1/4" WIDE, 1" DEEP, ARRANGE TO FORM PANELS 6' MAX. IN EITHER DIRECTION.

## SIDEWALK AT EXISTING CURB
NOT TO SCALE

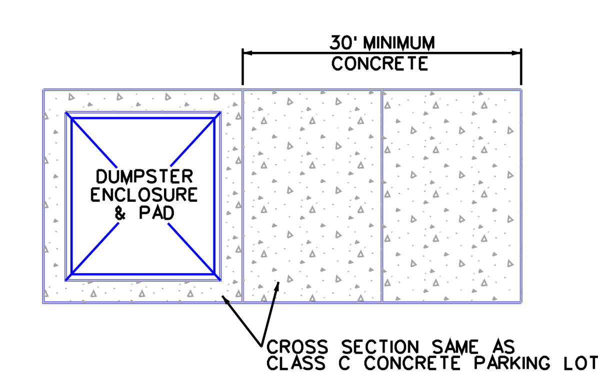


## DUMPSTER PAD
NOT TO SCALE

## GENERAL NOTES

1. THE HMA BOND COAT SHALL BE SS-1h 0.05-0.10 GAL/SYD.
2. THE SAFETY PATH THRU BOULAVARD ISLANDS SHALL BE CONCRETE.
3. SAFETY PATH RAMPS SHALL BE CONSTRUCTED OF CONCRETE AND SHALL EXTEND A MINIMUM OF FOUR (4) FEET PAST THE RAMP.
4. HMA DRIVEWAYS ARE TO BE 3" MDOT MIX 36A (TWO 1.5" LIFTS) WITH 8" MDOT 21AA BASE.
5. 1100 SERIES (MDOT 1990 STANDARDS) MAY BE SUBSTITUTED IF SOILS CONSULTANT RECOMMENDATION IS PROVIDED.
6. SIDEWALK RAMPS ARE TO BE CONSTRUCTED PER MDOT & ADA REQUIREMENTS.
7. PROPER DRAINAGE AND SUBDRAINAGE SHALL BE PROVIDED FOR ALL PAVEMENT.
8. PROPER METHODS SHALL BE USED WHEN SAWCUTTING EXISTING PAVEMENT.

REVISION:

DATE:

Terms and Conditions for Electronic Data:

This document is provided in electronic format for the referenced project. It is understood and agreed that any use or reuse of original or altered files will be at the user's own risk and legal responsibility. It is also agreed that the electronic files provided by Giffels-Webster Engineers, Inc. (GWE) are being provided for general information purposes only. Neither the electronic files nor any CAD versions are to be relied on for construction layout purposes. The user expressly indemnifies and holds GWE harmless for any and all claims, suits, liability, demands or other costs arising out of or resulting from the unauthorized use of these materials. GWE makes no representation as to the accuracy of the information provided by the electronic media. Data on electronic media can deteriorate or be modified without the knowledge of GWE. Electronic media viruses are increasing in complexity and growth. GWE advises all users to scan any disc received from outside sources with a current antivirus program. It is understood and agreed that GWE will not be responsible for any damage caused by such a virus. If any virus is detected by your system on any media received from GWE it is your responsibility to contact us immediately.

72 HOURS (3 WORKING DAYS)
BEFORE YOU DIG
CALL MISS DIG
800-482-7171
(TOLL FREE)

| | |
|---|---|
| PRINCIPAL: | K.M. |
| PROJ. MNGR: | J.S. |
| DESIGN: | D.N. |
| DRAWN: | D.N. |
| IND. REVIEW: | S.R. |

PROFESSIONAL SEAL

DEVELOPED FOR:

THE CHARTER TOWNSHIP OF OXFORD
300 DUNLAP ROAD
OXFORD
MI, 48371
(248) 628-9787

Giffels-Webster Engineers, Inc.
ENGINEERS-LAND SURVEYORS
PLANNERS-LANDSCAPE ARCHITECTS
2871 BOND STREET
ROCHESTER HILLS, MI 48309
PHONE (248) 852-3100
FAX (248) 852-6372
407 E. FORT STREET, SUITE 600
DETROIT, MI 48226
PHONE (313) 962-4442
FAX (313) 962-5068
6303 26 MILE ROAD, SUITE 100
WASHINGTON, MI 48094
PHONE (586) 781-8950
FAX (586) 781-8951
EMAIL info@giffelswebster.com
www.giffelswebster.com

SHEET TITLE:

# PAVEMENT

STANDARD DETAIL SHEET

OXFORD TOWNSHIP, OAKLAND COUNTY, MI.

| | |
|---|---|
| DATE: | 01/01/08 |
| SCALE: | NO SCALE |
| SHEET: | 1 OF 1 |
| JOB: | 17356.01 |

Copyright © 2007 Giffels-Webster Engineers, Inc. No reproduction shall be made without the prior written consent of Giffels-Webster Engineers, Inc.

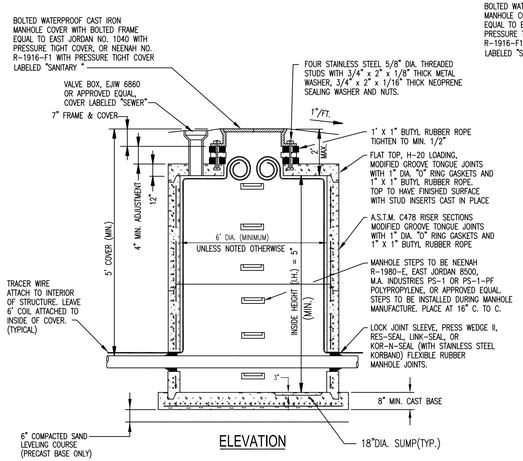


ELEVATION

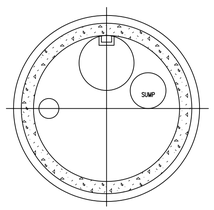


PLAN

## TYPICAL STRUCTURE DETAIL

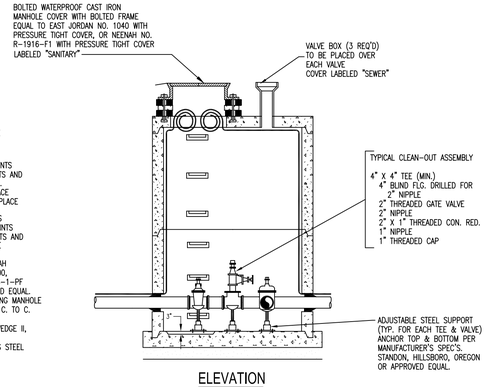


ELEVATION

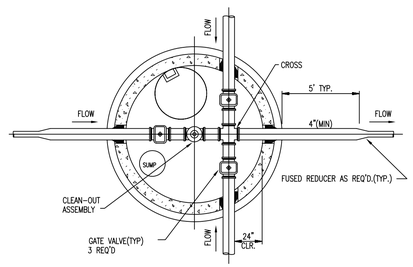


PLAN

## BRANCH FLUSHING CONNECTION (BFC) 4 WAY IN WELL

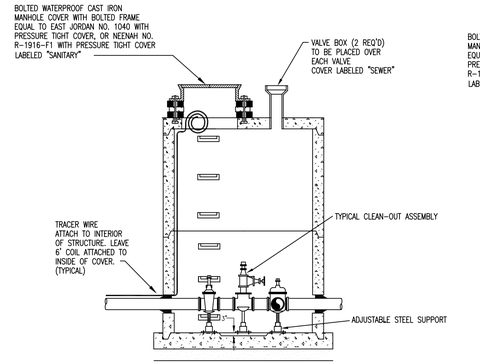


ELEVATION

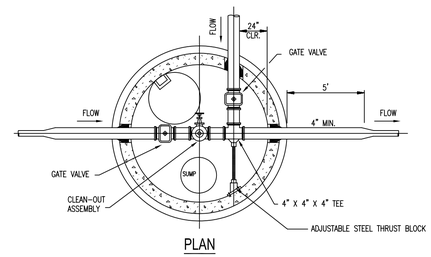


PLAN

## BRANCH FLUSHING CONNECTION (BFC) 3 WAY IN WELL

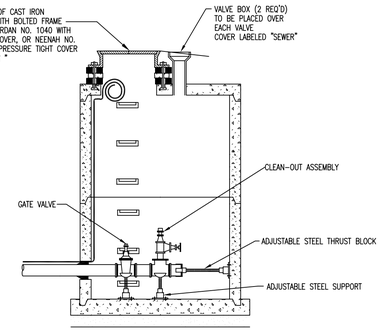


ELEVATION

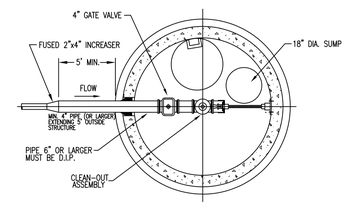


PLAN

## TERMINAL FLUSHING CONNECTION (TFC) IN WELL

## NOTES:

1. FLANGED OR MECHANICAL JOINTS MUST BE USED WITHIN VALVE WELLS, AND FUSED JOINTS OUTSIDE OF VALVE WELLS. 4" MIN. VALVE SIZE.
2. SHOP DRAWINGS MUST BE SUBMITTED AND APPROVED ON THE FOLLOWING COMPONENTS, GATE VALVES, AIR RELEASE VALVES, TAPPING SLEEVE AND VALVE, CLEAN-OUT ASSEMBLIES, ADJUSTABLE STEEL SUPPORT AND THRUST RESTRAINTS, TRANSITION FITTINGS BETWEEN PIPE MATERIAL.
3. WHERE PRESSURE SEWER MAIN IS 6" DIAMETER NO REDUCER IS REQUIRED OUTSIDE OF VALVE STRUCTURES AND 6" D.I.P. PIPING & VALVING IS REQUIRED INSIDE OF STRUCTURES.
4. GATE VALVE SHALL BE DESIGNED FOR 250 PSI MINIMUM WORKING PRESSURE AND MEET THE REQUIREMENTS SET BY ANSI AND AWWA. GATE VALVES SHALL BE DUCTILE IRON BODY, BODY AND BONNET FUSION BONDED EPOXY COATING INSIDE AND OUT, FULLY BRONZE MOUNTED, BRONZE STEM, O-RING STEM SEAL, NON-RISING STEM, SEATING MECHANISM SHALL BE A ONE-PIECE WEDGE DESIGN. THE SINGLE DUCTILE IRON WEDGE SHALL BE BONDED-IN-PLACE NITRILE ELASTOMER COVERING.

   GATE VALVE SHALL HAVE A CLEAR WATERWAY EQUIVALENT IN AREA, WHEN FULLY OPEN, EQUAL TO THAT OF THE CONNECTING PIPE, VALVE SHALL BE MADE TO OPEN WHEN TURNED TO THE LEFT, OR COUNTER CLOCKWISE. THE GATE VALVE SHALL HAVE A SQUARE WRENCH NUT.

   GATE VALVES SHALL BE INSTALLED IN MANHOLES AS DETAILED ON THE DRAWINGS. VALVES TO BE FURNISHED WITH FLANGE CONNECTIONS FOR DUCTILE IRON PIPE. O.D. SIZE TO FIT IPS (IRON PIPE SIZE).

   GATE VALVE SHALL BE AS MANUFACTURED BY AMERICAN FLOW CONTROL, OR APPROVED EQUAL.

## LOW PRESSURE SANITARY SEWER HYDROSTATIC TESTS

THE CONTRACTOR SHALL PERFORM ALL NECESSARY PRELIMINARY HYDROSTATIC TESTS AND SHALL MAKE ALL NECESSARY REPAIRS, INCLUDING THE REPAIR OF ALL VISIBLE LEAKS AND CRACKS, AND RETEST WITH HIS OWN FORCES TO READY THE FORCEMAINS FOR FINAL HYDROSTATIC INSPECTION AND TESTING WHICH WILL BE WITNESSED BY THE ENGINEER. IMMEDIATELY AFTER THE FORCEMAINS HAVE PASSED SUCH PRELIMINARY TESTS, THE CONTRACTOR SHALL SUBMIT A WRITTEN REQUEST TO THE ENGINEER FOR FINAL HYDROSTATIC INSPECTION AND TEST.

PRIOR TO AND DURING THE HYDROSTATIC TEST, THE NEW MAIN CANNOT BE CONNECTED TO FORCEMAINS OR PUMP STATIONS INSTALLED IN OTHER CONTRACTS, EXCEPT AS SPECIFIED HEREIN.

THE CONTRACTOR SHALL FURNISH ALL NECESSARY PERSONNEL, TEMPORARY TIMBER BRACING, PLUGS, TEST PUMPS, AND ALL OTHER NECESSARY APPARATUS FOR CONDUCTING THE TEST. BEFORE APPLYING TEST PRESSURE, ALL AIR SHALL BE EXPELLED FROM THE PIPE. IF NECESSARY TO ACCOMPLISH THIS, TAPS SHALL BE MADE AT POINTS OF HIGHEST ELEVATION IN THE PIPE, AND SUCH OPENING SUBSEQUENTLY CLOSED PRIOR TO TEST.

SEE OCDC LOW PRESSURE SEWER SPECIFICATIONS FOR HYDROSTATIC TESTING & ACCEPTANCE REQUIREMENTS.

MAXIMUM LENGTH OF MAIN LINE PIPE SHALL NOT EXCEED 2,000 L.F. FOR ANY TEST.

IN THE EVENT THAT THE LEAKAGE EXCEEDS THE SPECIFIED AMOUNT, THE JOINTS IN THE LINE SHALL BE CAREFULLY INSPECTED FOR LEAKS AND REPAIRED WHERE NECESSARY. ANY PIPES OR SPECIAL CASTINGS FOUND TO BE CRACKED SHALL BE REMOVED AND REPLACED WITH NEW PIECES BY THE CONTRACTOR. AFTER THIS WORK HAS BEEN DONE, THE TEST SHALL BE REPEATED. FINAL ACCEPTANCE OF THE LINES WILL NOT BE MADE UNTIL SATISFACTORY TESTS HAVE BEEN PASSED.

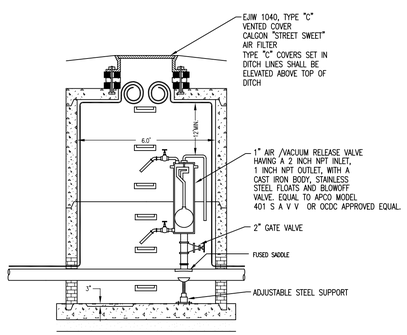


ELEVATION

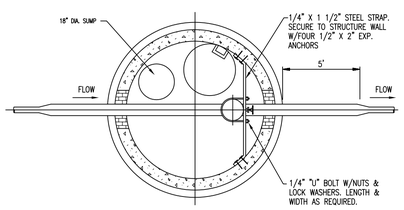


PLAN

## AIR/VACUUM RELEASE VALVE (ARV) IN WELL

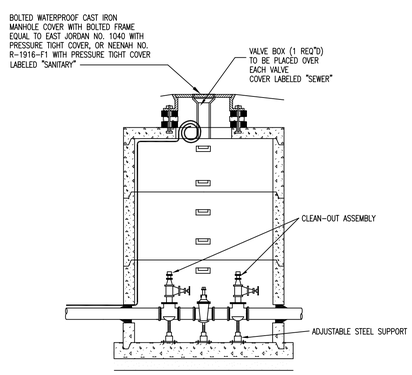


ELEVATION

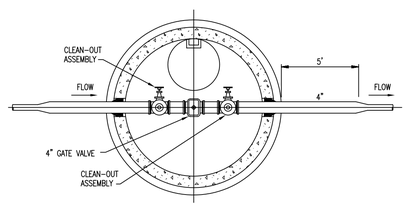


PLAN

## INTERMEDIATE FLUSHING CONNECTION (IFC) IN WELL

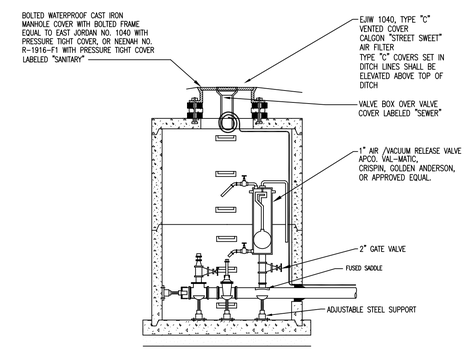


ELEVATION

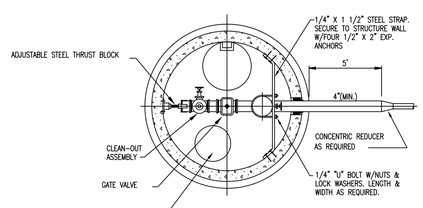


PLAN

## TERMINAL FLUSHING CONNECTION WITH AIR/VACUUM RELEASE VALVE (TFC/ARV) IN WELL

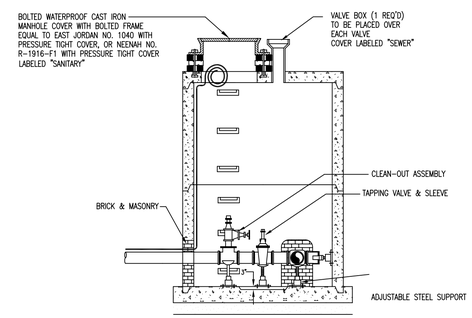


ELEVATION

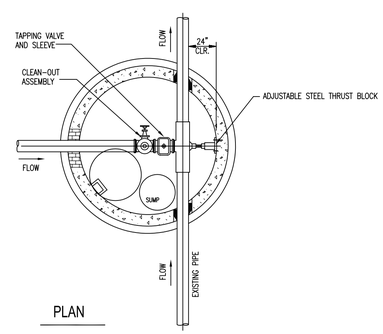


PLAN

## TAPPING SLEEVE & VALVE (TSV) IN WELL

PLACE EJIW 1040, TYPE "C" VENTED COVER ON ALL STRUCTURES CONTAINING AN AIR/VACUUM RELEASE VALVE.

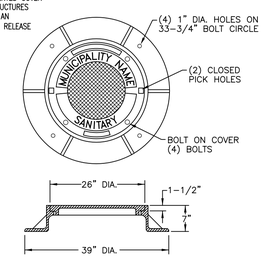


EAST JORDAN IRON WORKS
HEAVY DUTY MATERIAL ASTM A48 CL.35
COVER WT., 150 LBS., CATALOG NO. 1040A
PATTERN NO. 1040A, PRODUCT NO. 1040XX OAKCOSTD.
2" RAISED LETTERS, 1" RAISED LETTERS
ALL RECESSED FLUSH.

## LETTERED MANHOLE COVER FOR LOCAL MUNICIPALITIES

# LOW PRESSURE
## SANITARY SEWER DETAILS AND NOTES

REVISION BLOCK
Data Source / Source Date: N/A

| Rev. No.: | Rev. By: | Rev. Date: | Description: |
|---|---|---|---|
| 1 | | | |
| 2 | | | |
| 3 | | | |
| 4 | | | |

| | |
|---|---|
| ORIG. DATE: | 11/13/02 |
| SCALE: | NONE |
| DESIGNED BY: | OCDC |
| DRAWN BY: | OCDC Mapping |

OCDC
OAKLAND COUNTY DRAIN COMMISSIONER
Jodie P. McCulloch

ONE PUBLIC WORKS DRIVE, BLDG 95 WEST
WATERFORD, MICHIGAN
48329-1907

SHEET NO.: 1 of 2

File Name: OCDCLP.dwg
By Updated: 07/18/2024 9:07:14 AM, Kaczynski, Jonathan (Contractor) - Jonathan.Kaczynski@oakgov.com

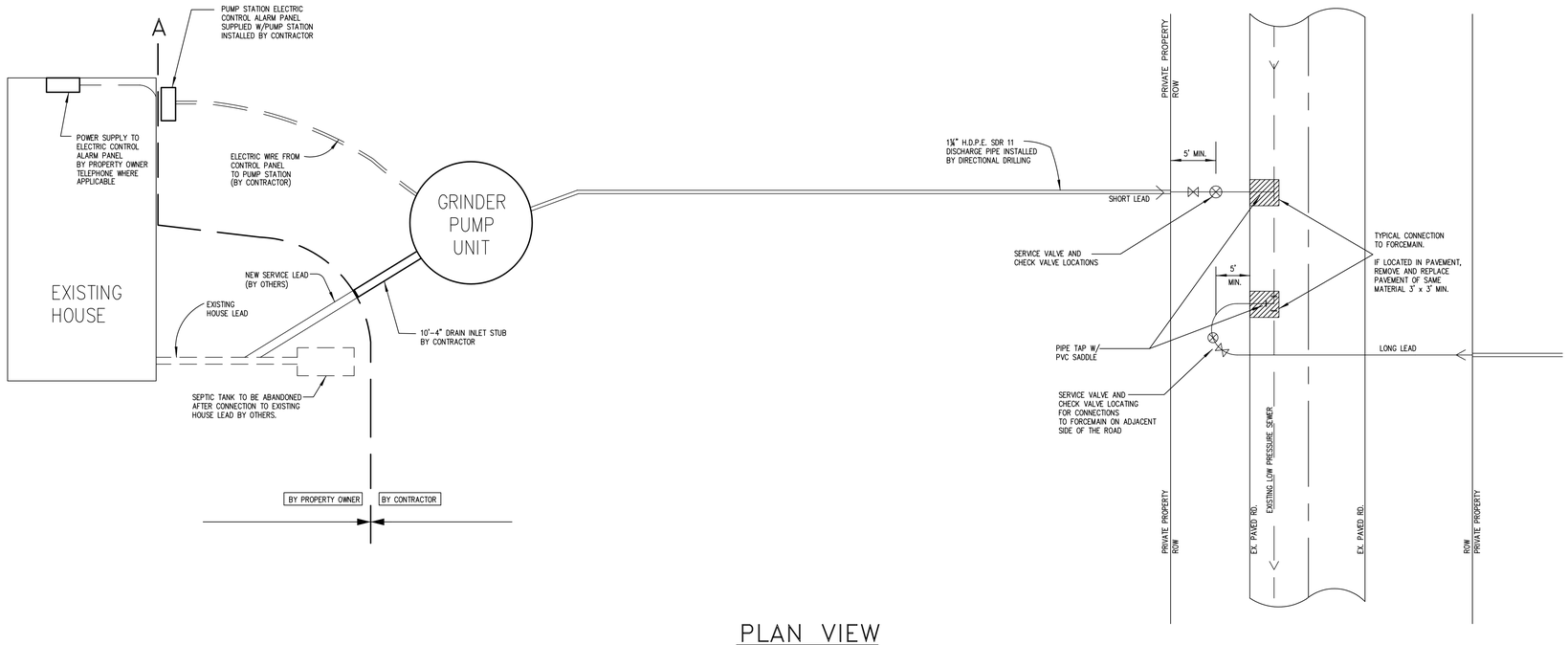


## PLAN VIEW

NOT TO SCALE

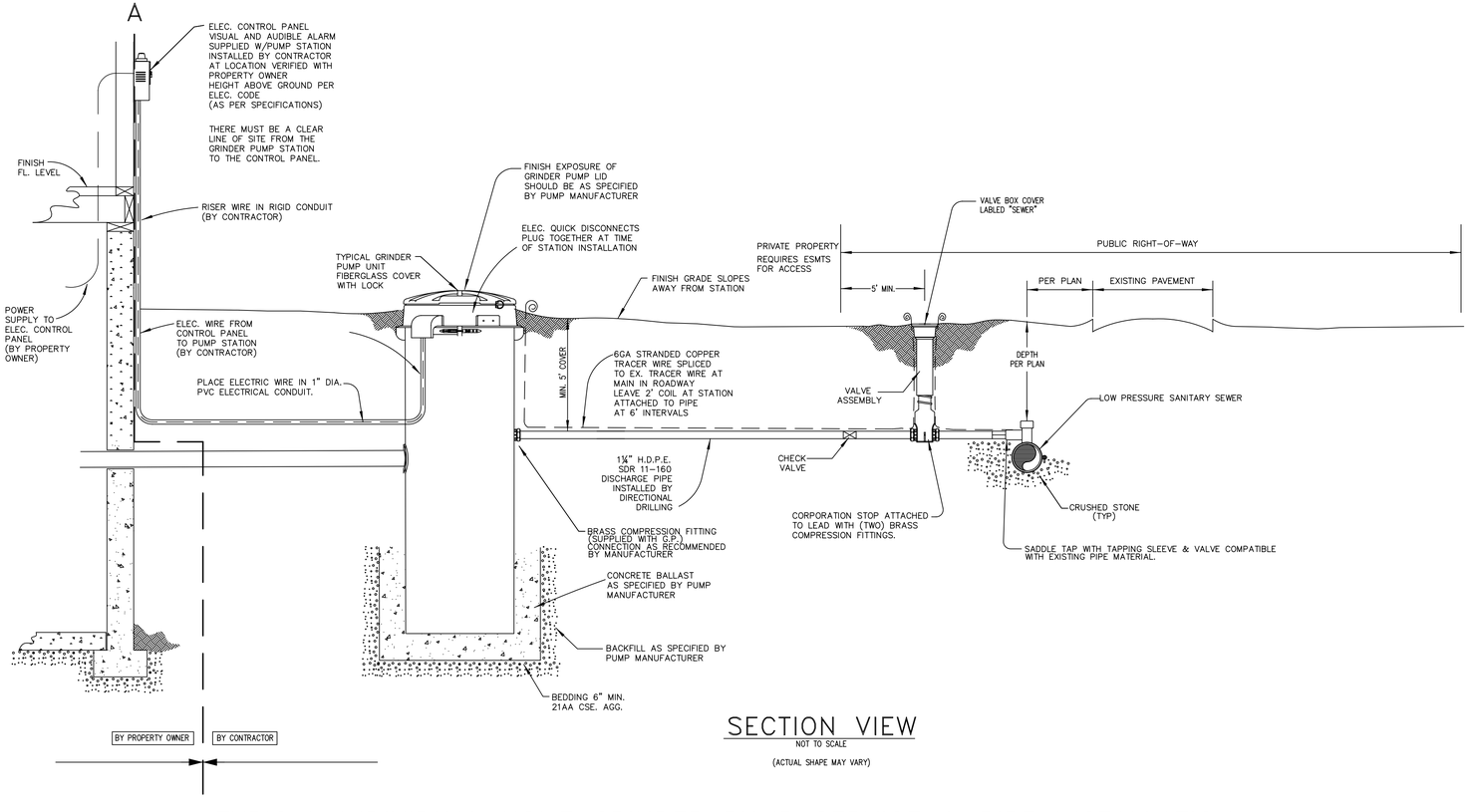


## SECTION VIEW

NOT TO SCALE

(ACTUAL SHAPE MAY VARY)

# TYPICAL INDIVIDUAL HOME GRINDER PUMP SERVICE & PIPE INSTALLATION

## PRESSURE SANITARY SEWER CONSTRUCTION NOTES

1. All construction shall conform to the current standards and specifications of the local unit of government and the Oakland County Drain Commissioner (OCDC). All sanitary sewer construction shall have full-time inspection supervised by a professional engineer provided by, or caused to be provided by, the local unit of government.

2. At all connections to OCDC sewers or extensions, and before start of construction, the contractor must obtain a Sewer Inspection Permit issued by OCDC. Gravity sewer permit charges are $250 for each connection plus $25 for each manhole constructed. Pressure sewer permit charges are $250 per 2,460 l.f. of force main with a minimum permit fee of $250. Failure to pass any test segment will result in an additional charge to the Contractor for each retest, in accordance with the above price schedule. The Contractor shall also have posted with OCDC a $5,000 surety bond and $500 cash deposit. The Contractor shall notify the local unit of government and the OCDC 24 hours prior to the beginning of any construction. Final acceptance tests must be witnessed by County personnel and must be scheduled in advance.

3. Hydrostatic test pressure shall be maintained at two hundred (200 LBS.) Pounds per square in at the point of highest elevation in the test section by pumping water form an approved source into the pipe for a period of at least two (2) hours, and in all cases long enough to permit assurance of a satisfactory test. Pressure losses shall not exceed the allowable leakage set by the Oakland County Drain Commissioner.

4. At all connections to an existing OCDC sewer, or extension thereto, a watertight bulkhead with a capped one inch diameter pipe to permit measuring infiltration shall be provided. A temporary 12-inch deep sump shall also be provided in the first manhole above the connection which will be filled in after successful completion of any acceptance test up to the standard fillet provided for the flow channel.

5. All building leads and risers shall be six inch SDR 23.5 ABS pipe with chemically fused joints or an approved equal pipe and joint. Building leads to be furnished with removable airtight and watertight stoppers.

6. All rigid sewer pipe shall be installed in Class "B" bedding or better. All flexible, semi-flexible, or composite sewer pipe shall be installed in conformance to OCDC specifications.

7. All new manholes shall have OCDC approved flexible, watertight seals where pipes pass through walls. Manholes shall be of pre cast sections with modified groove tongue and rubber gasket type joints. Pre cast manhole cone sections shall be OCDC approved modified eccentric cone type. All manholes shall be provided with bolted, watertight covers.

8. At all connections to manholes on OCDC sewers, or extensions thereto, drop connections will be required when the difference in invert elevations exceeds 18 inches.

9. Taps to existing manholes shall be made by coring. The contractor shall place a KOR-N-SEAL boot (or OCDC approved equal) after coring is completed. Blind drilling will not be permitted in lieu of coring.

10. New manholes constructed directly on OCDC sewers shall be provided with covers reading "Oakland County Drain Commissioner-Sanitary" in raised letters. New manholes built over an existing sanitary sewer shall have monolithic poured bottoms.

11. No ground water, storm water, construction water, down spout drainage, or weep tile drainage shall be allowed to enter any sanitary sewer installation.

12. Prior to any excavation, the Contractor shall telephone MISS DIG (800-482-7171) for the location of underground pipeline and cable facilities and shall also notify representatives of other utilities located in the vicinity of the work.

13. A 18 inch minimum vertical separation and 10 foot minimum horizontal separation must be maintained between sanitary sewer and water main.

# LOW PRESSURE
## SANITARY SEWER DETAILS AND NOTES

REVISION BLOCK

Data Source / Source Date: N/A

| Rev. No.: | Rev. By: | Rev. Date: | Description: |
|---|---|---|---|
| 1 | | | |
| 2 | | | |
| 3 | | | |
| 4 | | | |

| | |
|---|---|
| ORIG. DATE: | 11/13/02 |
| SCALE: | NONE |
| DESIGNED BY: | OCDC |
| DRAWN BY: | OCDC Mapping |

OCDC
OAKLAND COUNTY DRAIN COMMISSIONER
John P. McCulloch

ONE PUBLIC WORKS DRIVE, BLDG 95 WEST
WATERFORD, MICHIGAN
48328-1907

SHEET NO.: 2 of 2

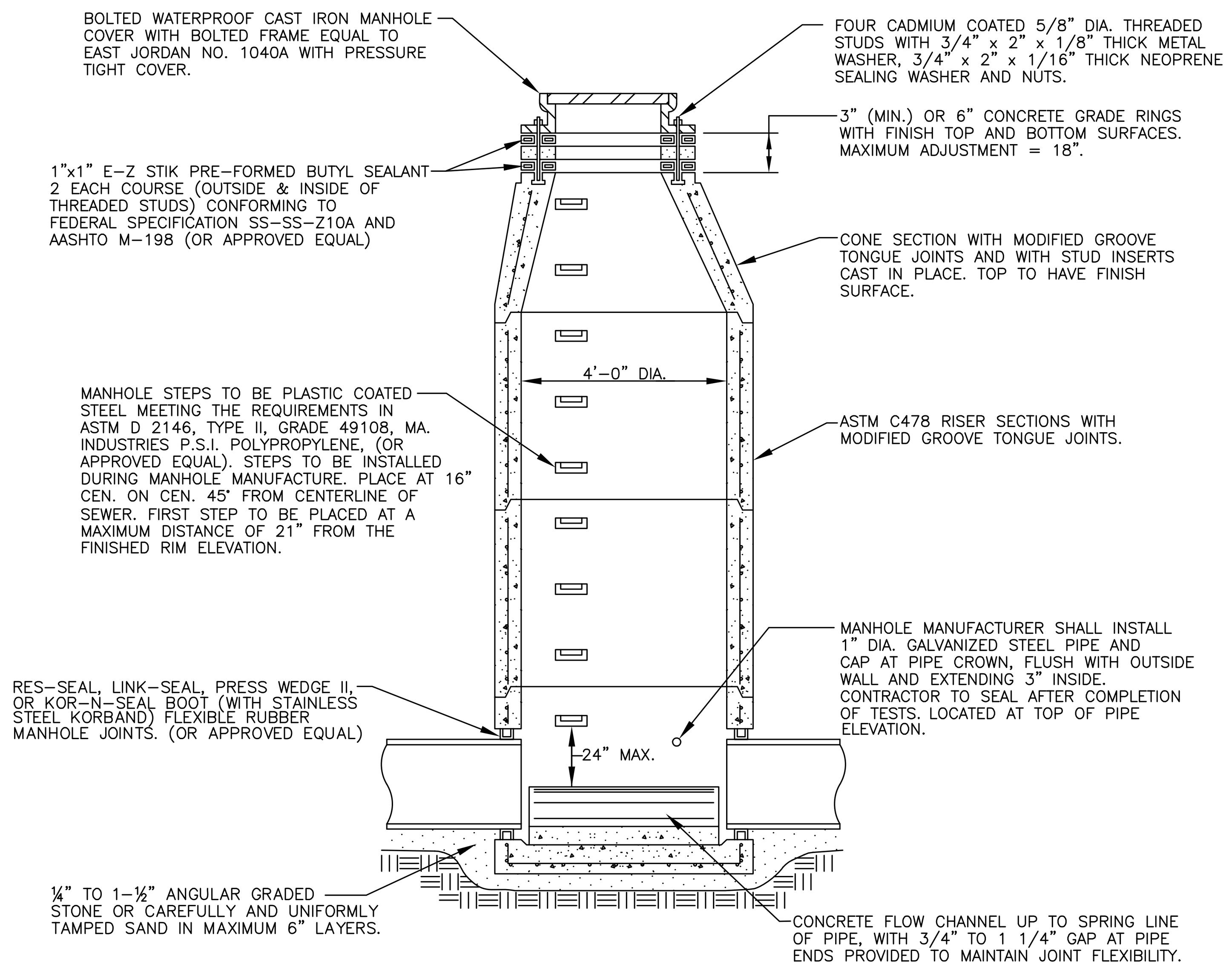


## STANDARD MANHOLE

| MAX. PIPE SIZE FOR STRAIGHT THRU INSTALLATION | MAX. PIPE SIZE FOR RIGHT ANGLE INSTALLATION |
|---|---|
| 24" | 18" |

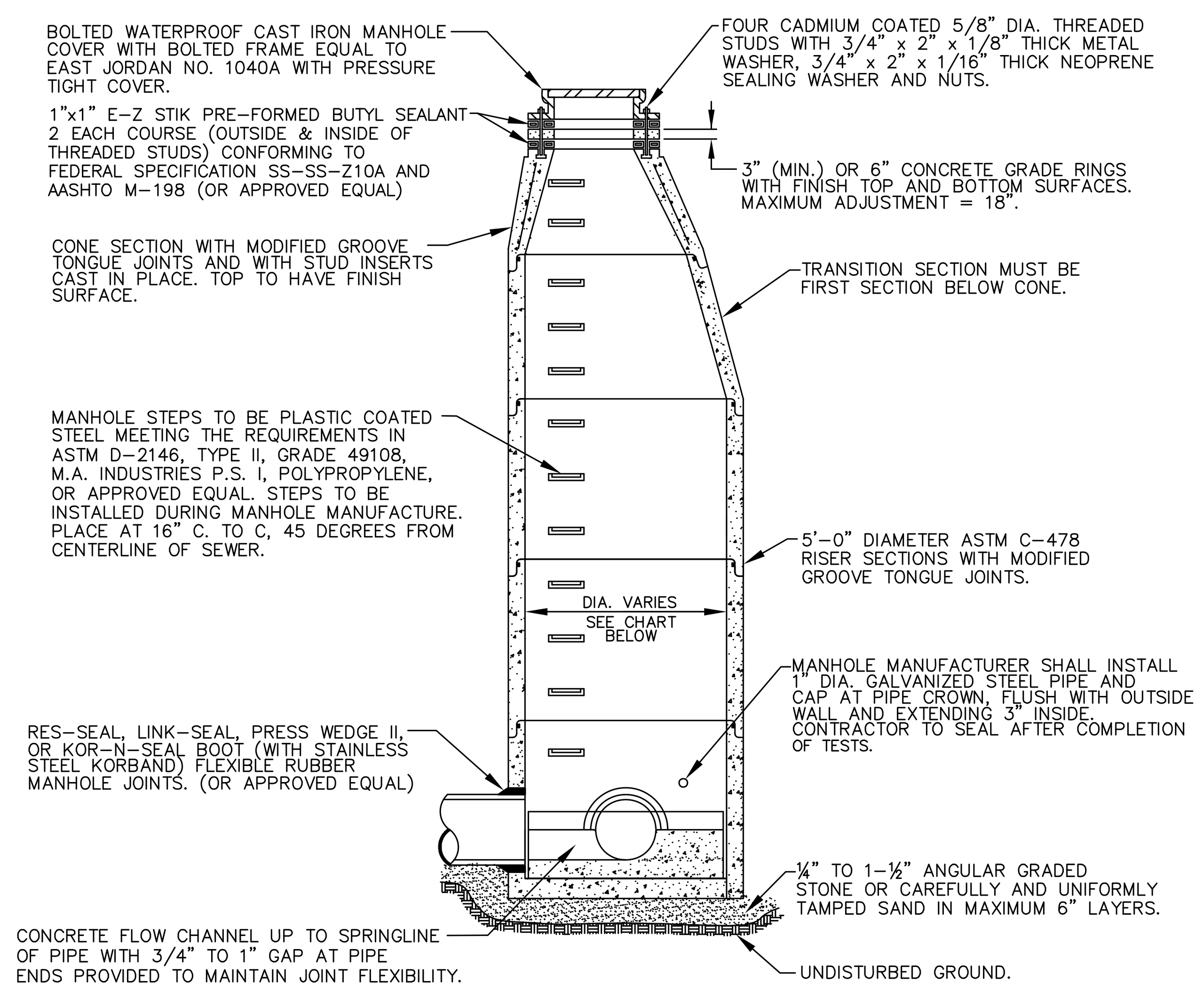


## STANDARD OVERSIZED MANHOLE

MANHOLE SIZING CHART

| MANHOLE DIAMETER | MAX. PIPE SIZE FOR STRAIGHT THRU INST. | MAX. PIPE SIZE FOR RIGHT ANGLE INST. |
|---|---|---|
| 5' | 36" | 24" |
| 6' | 42" | 36" |
| 7' | 60" | 42" |

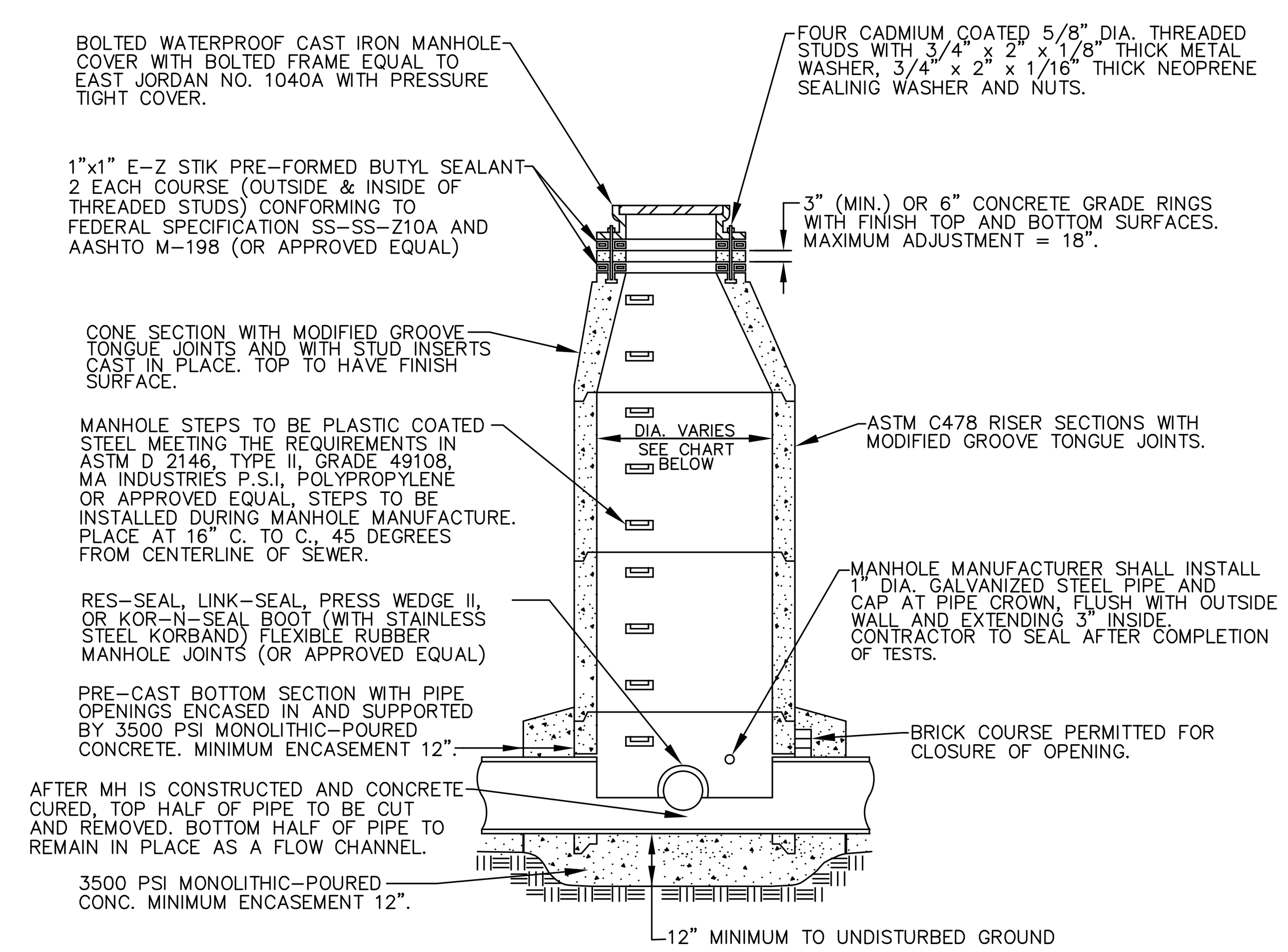


## MANHOLE CONSTRUCTED OVER EXISTING SEWER

MANHOLE SIZING CHART

| MANHOLE DIAMETER | MAX. PIPE SIZE FOR STRAIGHT THRU INST. |
|---|---|
| 4' | 24" |
| 5' | 36" |
| 6' | 42" |
| 7' | 60" |

## SANITARY SEWER CONSTRUCTION NOTES

1. ALL CONSTRUCTION SHALL CONFORM TO THE CURRENT STANDARDS AND SPECIFICATIONS OF THE LOCAL UNIT OF GOVERNMENT AND THE OAKLAND COUNTY DRAIN COMMISSIONER (OCDC). ALL SANITARY SEWER CONSTRUCTION SHALL HAVE FULL-TIME INSPECTION SUPERVISED BY A STATE OF MICHIGAN LICENSED PROFESSIONAL ENGINEER PROVIDED BY, OR CAUSED TO BE PROVIDED BY, THE LOCAL UNIT OF GOVERNMENT.
2. AT ALL CONNECTIONS TO OCDC SEWERS OF EXTENSIONS, AND BEFORE START OF CONSTRUCTION, THE CONTRACTOR MUST OBTAIN A SEWER INSPECTION PERMIT ISSUED BY OCDC. GRAVITY SEWER PERMIT CHANGES ARE $250 FOR EACH CONNECTION PLUS $25 FOR EACH MANHOLE CONSTRUCTED. PRESSURE SEWER PERMIT CHARGES ARE $250 PER 2,460 L.F. OF FORCE MAIN WITH A MINIMUM PERMIT FEE OF $250. FAILURE TO PASS ANY TEST SEGMENT WILL RESULT IN AN ADDITIONAL CHARGE TO THE CONTRACTOR FOR EACH RETEST, IN ACCORDANCE WITH THE ABOVE PRICE SCHEDULE. THE CONTRACTOR SHALL ALSO HAVE POSTED WITH OCDC A $5,000 SURETY BOND AND $500 CASH DEPOSIT. THE CONTRACTOR SHALL NOTIFY THE LOCAL UNIT OF GOVERNMENT AND OCDC (248-858-1110) 24 HOURS PRIOR TO THE BEGINNING OF ANY CONSTRUCTION. FINAL ACCEPTANCE TESTS MUST BE WITNESSED BY COUNTY PERSONNEL AND MUST BE SCHEDULED BY MUNICIPALITY OR IT'S CONSULTANT IN ADVANCE WITH 24 HOUR NOTICE AT 248-858-1110.
3. NO SEWER INSTALLATION SHALL HAVE AN INFILTRATION EXCEEDING 100 GALLONS PER INCH DIAMETER PER MILE OF PIPE IN A 24 HOUR PERIOD, AND NO SINGLE RUN OF SEWER BETWEEN MANHOLES SHALL EXCEED 100 GALLONS PER INCH DIAMETER PER MILE. AIR TESTS IN LIEU OF INFILTRATION TESTS SHALL BE AS SPECIFIED IN THE OAKLAND COUNTY DRAIN COMMISSIONER STANDARDS. ONLY PIPE AND PIPE JOINTS APPROVED BY OCDC MAY BE USED FOR SANITARY SEWER CONSTRUCTION.
4. LOCATED IN THE FIRST MANHOLE UPSTREAM FROM THE POINT OF ALL CONNECTIONS TO AN EXISTING OCDC SEWER, OR EXTENSION THERETO, A TEMPORARY 12-INCH DEEP SUMP SHALL BE PROVIDED IN THE FIRST MANHOLE ABOVE THE CONNECTION WHICH WILL BE FILLED IN AFTER SUCCESSFUL COMPLETION OF ANY ACCEPTANCE TEST UP TO THE STANDARD FILLET PROVIDED FOR THE FLOW CHANNEL. A WATERTIGHT BULKHEAD SHALL BE PROVIDED ON THE DOWNSTREAM SIDE OF THE SUMP MANHOLE.
5. AT ALL TIMES WHEN LAYING OF NEW PIPE IS NOT ACTUALLY IN PROGRESS, THE UPSTREAM OPEN END OF THE PIPE SHALL BE CLOSED BY TEMPORARY WATERTIGHT PLUGS OR BY OTHER APPROVED MEANS. IF WATER IS IN THE TRENCH WHEN WORK IS RESUMED, THE PLUG SHALL NOT BE REMOVED UNTIL THE DANGER OF WATER ENTERING THE PIPE HAS PASSED.
6. ALL BUILDING LEADS AND RISERS SHALL BE SIX INCH SDR 23.5 ABS PIPE WITH CHEMICALLY FUSED JOINTS OR AN APPROVED EQUAL PIPE AND JOINT. BUILDING LEADS TO BE FURNISHED WITH REMOVABLE AIRTIGHT AND WATERTIGHT STOPPERS.
7. ALL RIGID SEWER PIPE SHALL BE INSTALLED IN CLASS "B" BEDDING OR BETTER. ALL FLEXIBLE, SEMI-FLEXIBLE, OR COMPOSITE SEWER PIPE SHALL BE INSTALLED IN CONFORMANCE TO OCDC SPECIFICATIONS.
8. ALL NEW MANHOLES SHALL HAVE OCDC APPROVED FLEXIBLE, WATERTIGHT SEALS WHERE PIPES PASS THROUGH WALLS. MANHOLES SHALL BE OF PRE CAST SECTIONS WITH MODIFIED GROOVE TONGUE AND RUBBER GASKET TYPE JOINTS. PRE CAST MANHOLE CONE SECTIONS SHALL BE OCDC APPROVED MODIFIED ECCENTRIC CONE TYPE. ALL MANHOLES SHALL BE PROVIDED WITH BOLTED, WATERTIGHT COVERS.
9. AT ALL CONNECTIONS TO MANHOLES ON OCDC SEWERS, OR EXTENSIONS THERETO, DROP CONNECTIONS WILL BE REQUIRED WHEN THE DIFFERENCE IN INVERT ELEVATIONS EXCEEDS 18 INCHES.
10. TAPS TO EXISTING MANHOLES SHALL BE MADE BY CORING. THE CONTRACTOR SHALL PLACE A KOR-N-SEAL BOOT (OR OCDC APPROVED EQUAL) AFTER CORING IS COMPLETED. BLIND DRILLING WILL ONLY BE PERMITTED IN LIEU OF CORING WITH PRIOR OCDC APPROVAL.
11. MANHOLES CONSTRUCTED DIRECTLY ON OCDC SEWERS SHALL BE PROVIDED WITH COVERS READING "OAKLAND COUNTY DRAIN COMMISSIONER-SANITARY" IN RAISED LETTERS.
12. NO GROUND WATER, STORM WATER, CONSTRUCTION WATER, DOWN SPOUT DRAINAGE OR WEEP TILE DRAINAGE SHALL BE ALLOWED TO ENTER ANY SANITARY SEWER INSTALLATION.
13. PRIOR TO ANY EXCAVATION, THE CONTRACTOR SHALL TELEPHONE MISS DIG (800-482-7171) FOR THE LOCATION OF UNDERGROUND PIPELINE AND CABLE FACILITIES AND SHALL ALSO NOTIFY REPRESENTATIVES OF OTHER UTILITIES LOCATED IN THE VICINITY OF THE WORK.
14. AN 18 INCH MINIMUM VERTICAL SEPARATION AND A 10 FOOT MINIMUM HORIZONTAL SEPARATION MUST BE MAINTAINED BETWEEN SANITARY SEWER AND WATER MAIN.
15. NEW MANHOLES BUILT OVER AN EXISTING SANITARY SEWER SHALL HAVE MONOLITHIC POURED BOTTOMS.

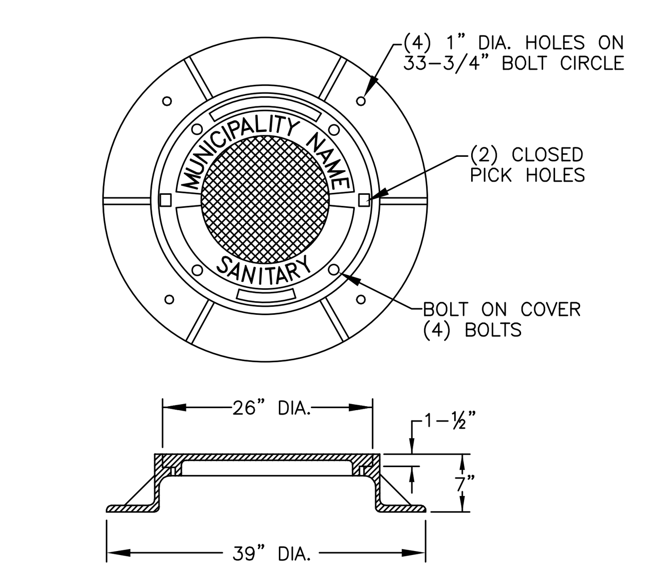


EAST JORDAN IRON WORKS
HEAVY DUTY MATERIAL ASTM A48 CL.35
COVER WT., 150 LBS., CATALOG NO. 1040A
PATTERN NO. 1040A, PRODUCT NO. 1040XX OAKCOSTD.
2" RAISED LETTERS, 1" RAISED LETTERS
ALL RECESSED FLUSH.

## LOCAL MUNICIPALITIES MANHOLE COVER

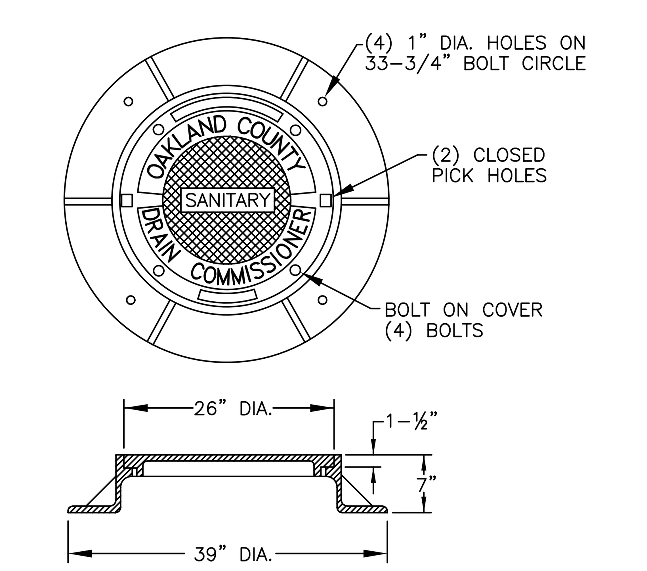


EAST JORDAN IRON WORKS
HEAVY DUTY MATERIAL ASTM A48 CL.35
COVER WT., 150 LBS., CATALOG NO. 1040A
PATTERN NO. 1040A, PRODUCT NO. 1040XX OAKCOSTD.
2" RAISED LETTERS, 1" RAISED LETTERS
ALL RECESSED FLUSH.

## O.C.D.C. LETTERED MANHOLE COVER

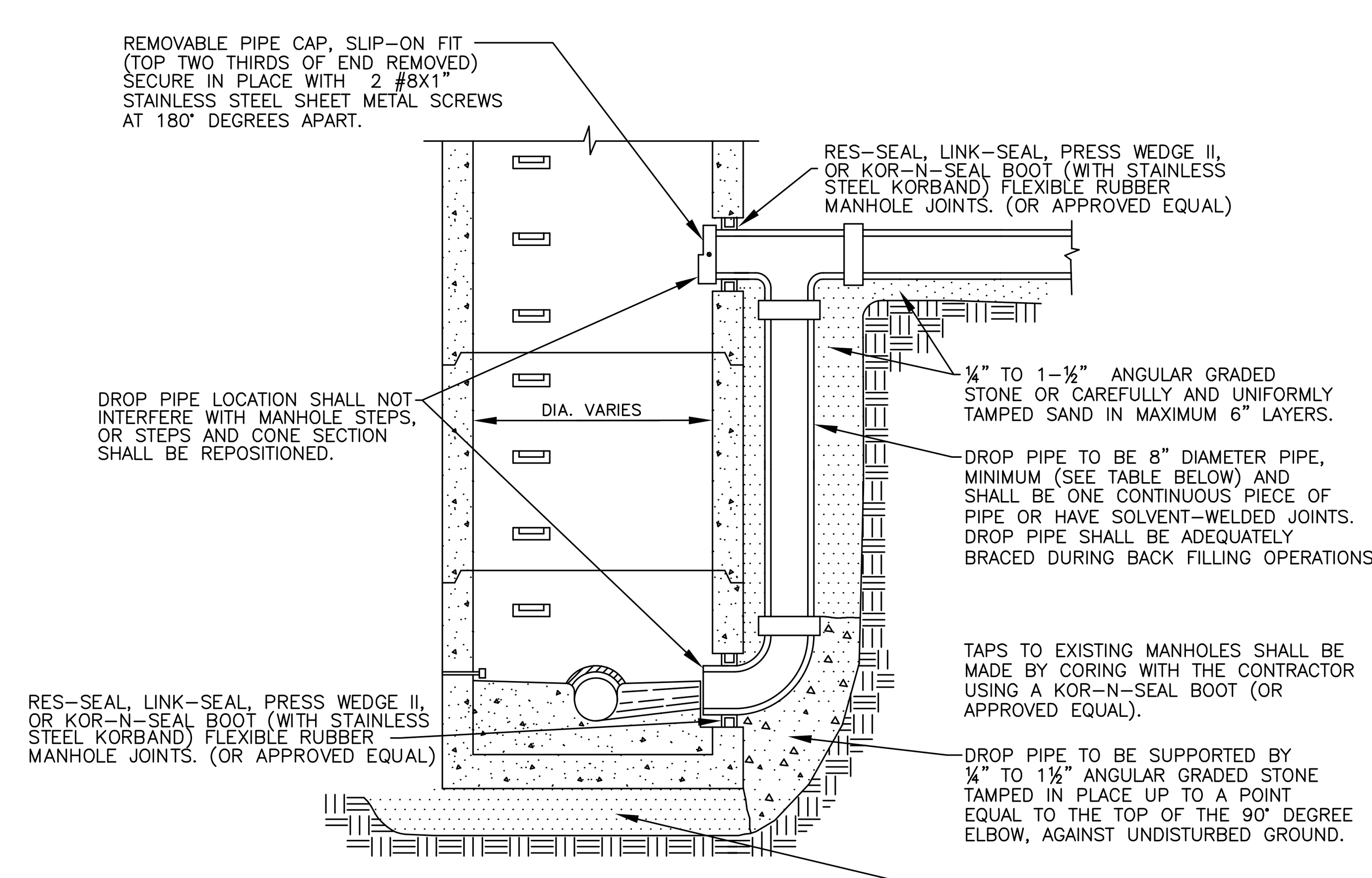


| SEWER SIZE | DROP SIZE | MH SIZE |
|---|---|---|
| UP TO 10" | 8" | 4' |
| UP TO 18" | 10" | 4' |
| UP TO 30" | 18" | 5' |

## EXTERIOR DROP CONNECTION

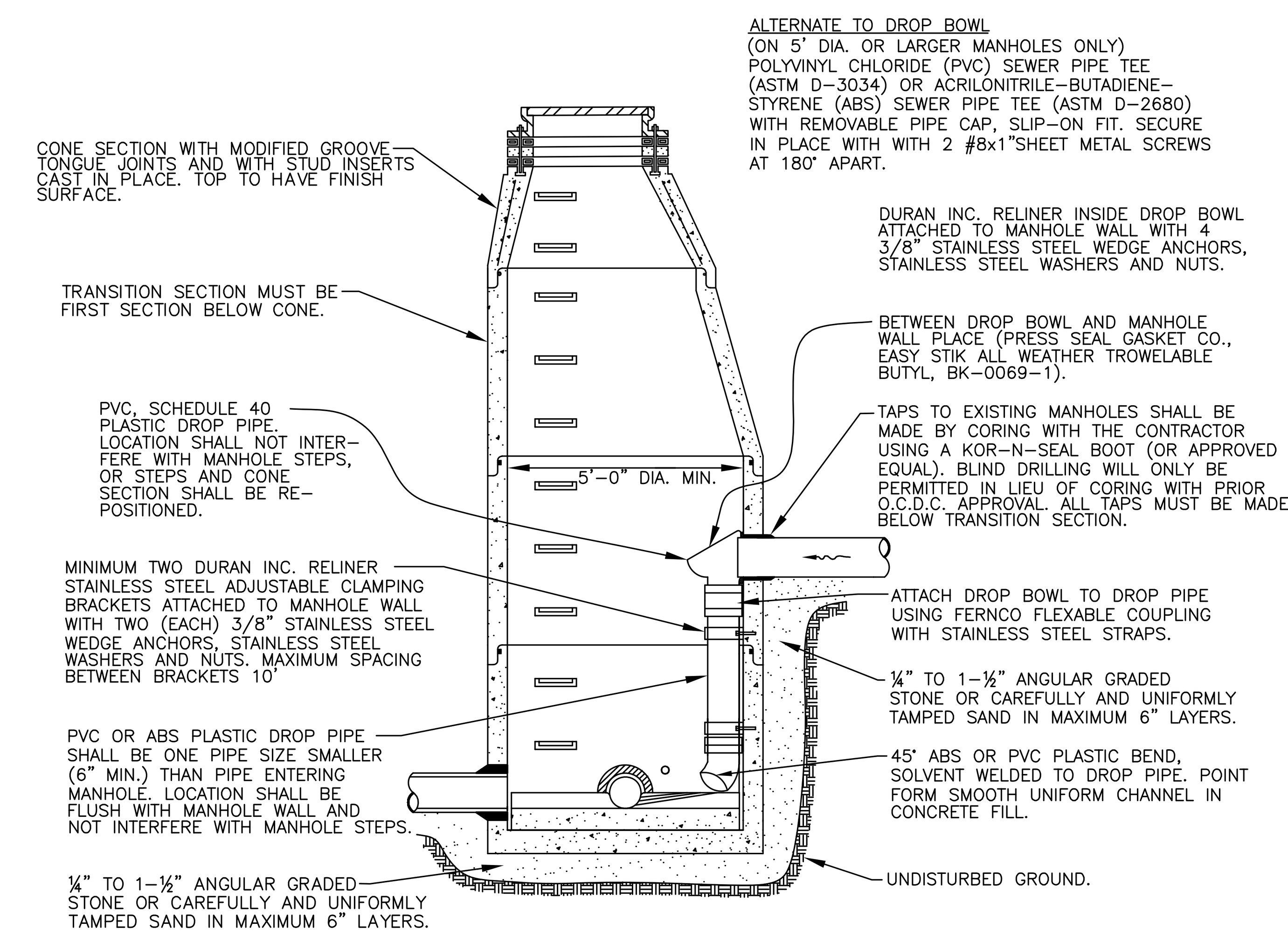


## INTERIOR DROP CONNECTION

Plotfile Name: GISQtrs.ctb
File Location: H:\STANDARD\DETAILS\ApprovedStandard\Sanitary\Std-San.dwg

**REVISION BLOCK**
**Parcel Base / Source Date:** N/A

| Rev. No.: | Rev. By: | Rev. Date: | Description: |
|---|---|---|---|
| 1 | lz | 03/03/03 | ADDED DETAILS / RELOCATED DETAILS |
| 2 | LJC | 08/23/03 | REMOVED NOTE ON MH CONSTRUCTED OVER EX. SEWER DETAIL |
| 3 | DS | 02/03/04 | REVISED SANITARY SEWER CONSTRUCTION NOTES |
| 4 | lz | 05/02/05 | REVISED NOTE #3 |

# SANITARY SEWER DETAILS AND NOTES

| | |
|---|---|
| **ORIG. DATE:** | 08/21/02 |
| **SCALE:** | NO SCALE |
| **DESIGNED BY:** | OCDC |
| **DRAWN BY:** | OCDC Mapping |

OAKLAND COUNTY DRAIN COMMISSIONER
John P. McCulloch

ONE PUBLIC WORKS DRIVE, BLDG 95 WEST
WATERFORD, MICHIGAN
48328-1907

**SHEET NO.:** 1 of 2

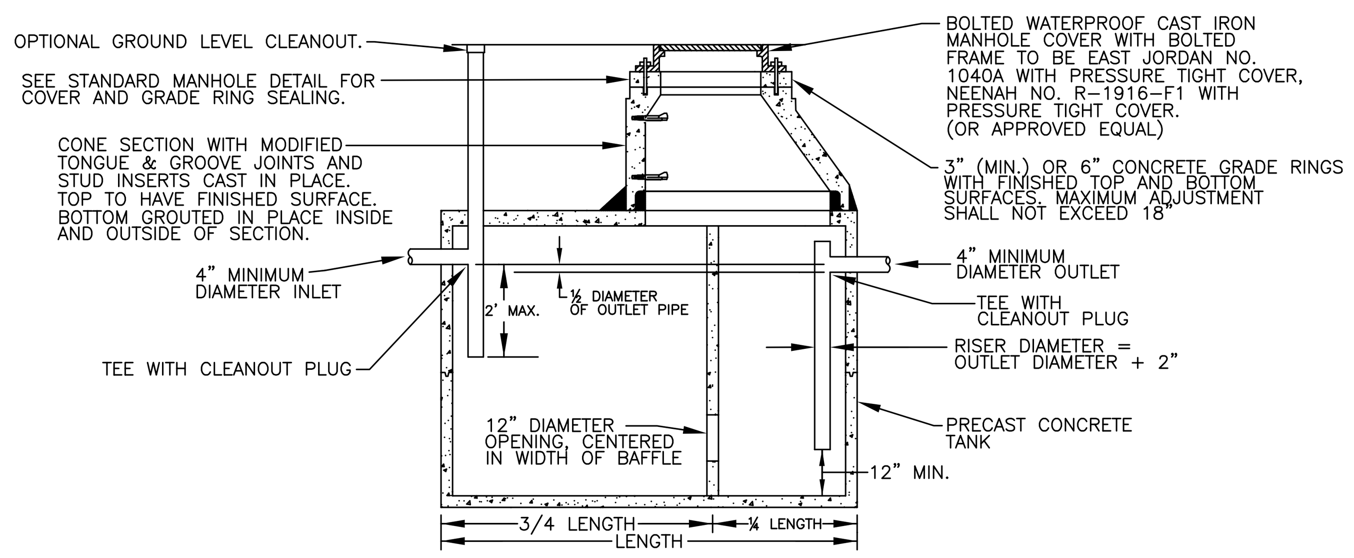


THE CONTRACTOR SHALL PROVIDE A GREASE TANK OF SUFFICIENT SIZE (MINIMUM 23 MINUTE STORAGE), CAPABLE OF SUPPORTING LIVE (HS-20 TRUCK) LOADS

## DOUBLE-COMPARTMENT GREASE INTERCEPTOR TANK FOR OUTLET PIPE BURIAL 42" AND DEEPER

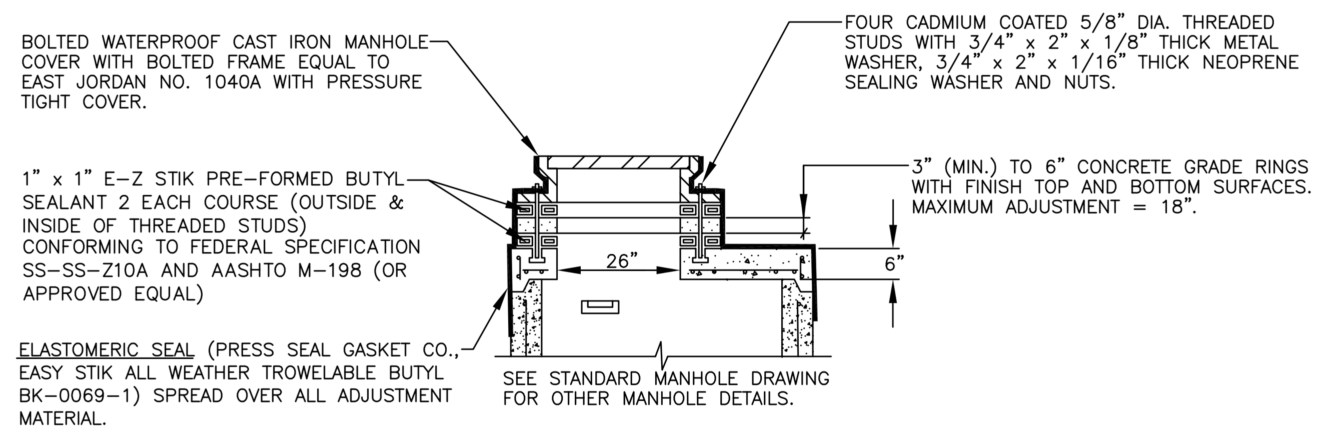


## FLAT TOP MANHOLE

## OAKLAND COUNTY DRAIN COMMISSIONER GRAVITY BUILDING LEAD REQUIREMENTS AND DETAILS

1. ALL BUILDING LEAD WORK MUST BE PERFORMED UNDER OAKLAND COUNTY DRAIN COMMISSIONER (OCDC) AND/OR LOCAL UNIT OF GOVERNMENT INSPECTION.
2. FOR ALL OCDC-OPERATED SYSTEMS, CALL 248-858-1110 24-HOURS IN ADVANCE OR WORK TO SCHEDULE INSPECTION.
3. NO SANITARY SEWER MAY BE USED AS A CLEANOUT OF DEWATERING OUTLET.
4. WHERE AN EXISTING BUILDING LEAD IS BEING EXTENDED, DISSIMILAR TYPES AND SIZES OF PIPE SHALL BE JOINED USING AN OCDC APPROVED ADAPTER.
5. APPROVED BUILDING LEAD PIPE FOR GRAVITY SEWER LEADS:
   A. ABS PLASTIC, ASTM D2751, SDR 23.5.
   B. PVC PLASTIC, ASTM D3034, SDR 23.5 OR ASTM D2665, SCHEDULE 40.
   C. DUCTILE IRON PIPE, AMERICAN WATER WORKS ASSOCIATION (AWWA) C-104/A21.4, CLASS 54. JOINTS SHALL BE SUPER BEL TITE, TYTON, TY-SEAL, MULTI-TITE, DUAL-TITE, OR VERI-TITE.
   D. ANY DEVIATIONS FROM SPECIFIED ABOVE REQUIRE APPROVAL BY OCDC.
6. ALLOWABLE TYPES OF SEWER PIPE ADAPTERS:
   A. FERNCO ADAPTER/REDUCER DONUTS.
   B. FERNCO FLEXIBLE COUPLING.
   C. MISSION CLAY BAND-SEAL COUPLING.
   D. SMITH-BLAIR STAINLESS STEEL REPAIR CLAMP.
   E. HURON-CLINTON O-RING ADAPTER.
   F. HAMILTON-KENT GEAR GRIP ADAPTER.
   G. PLANT FABRICATED JOINT CONVERSION PIPE.

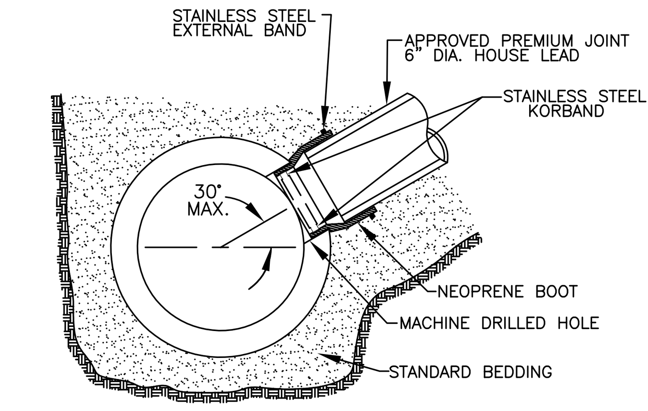


## KOR-N-TEE TAP FOR CONCRETE PIPE

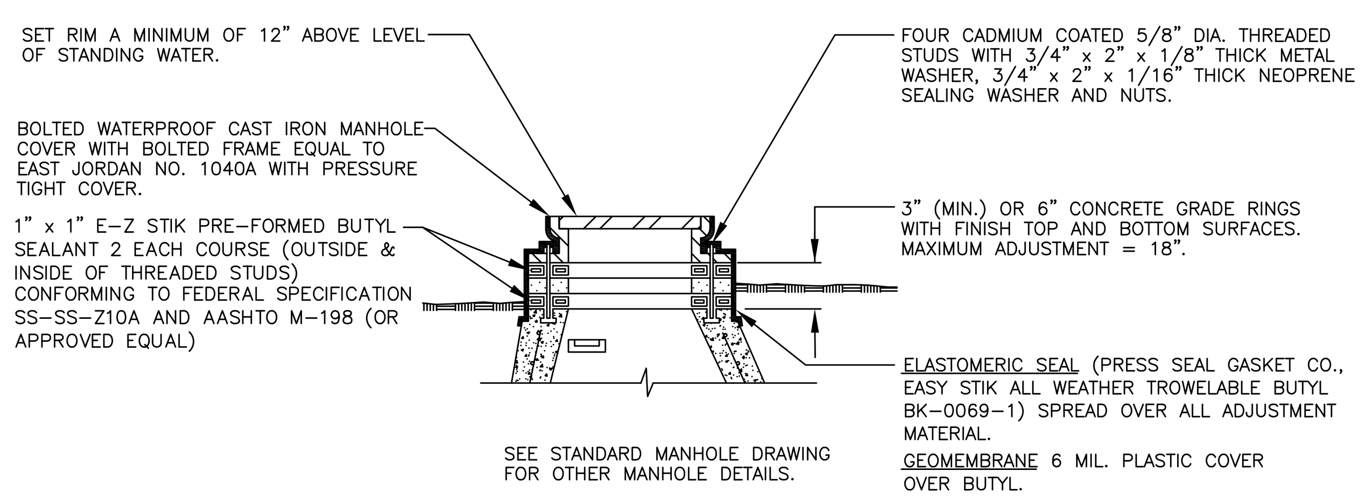


## ADJUSTMENT DETAIL FOR MANHOLE TOPS WITHIN FLOOD PRONE AREAS

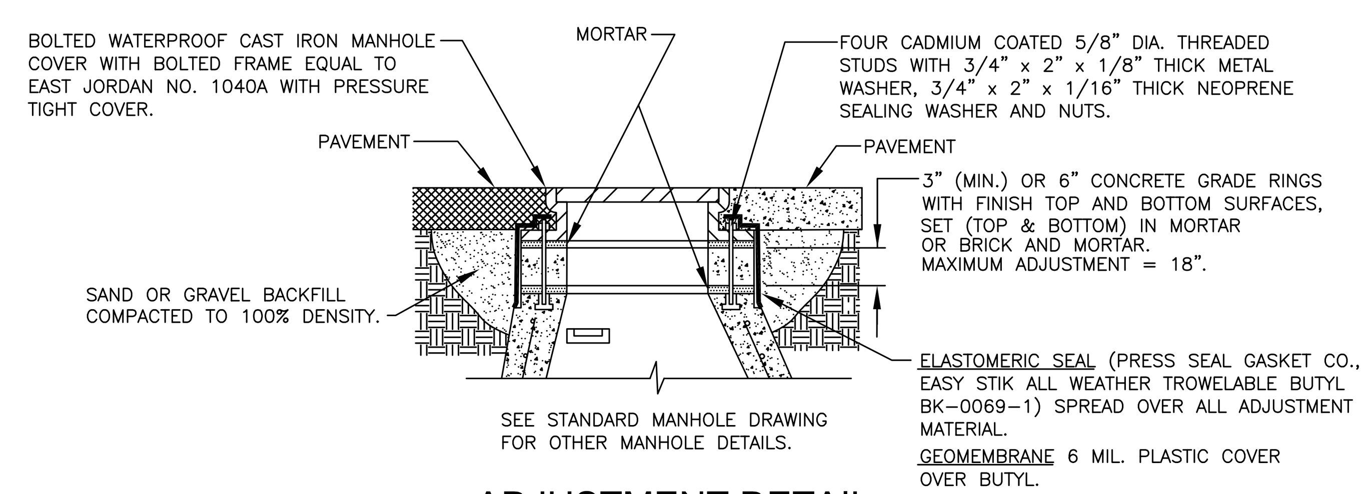


## ADJUSTMENT DETAIL MANHOLE TOPS WITHIN PAVEMENT AREAS

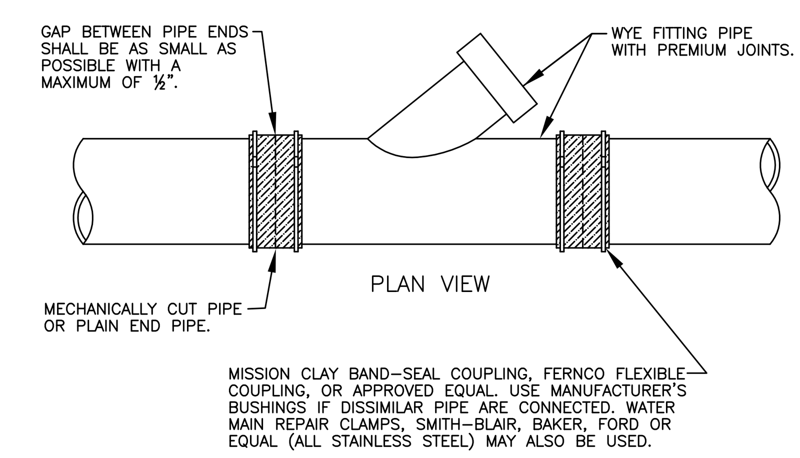


NOTE: PIPE SHALL BE BEDDED IN STANDARD PLASTIC PIPE BEDDING.

## WYE PIPE INSERTION WITH FLEXIBLE COUPLINGS (RIGID PIPE)

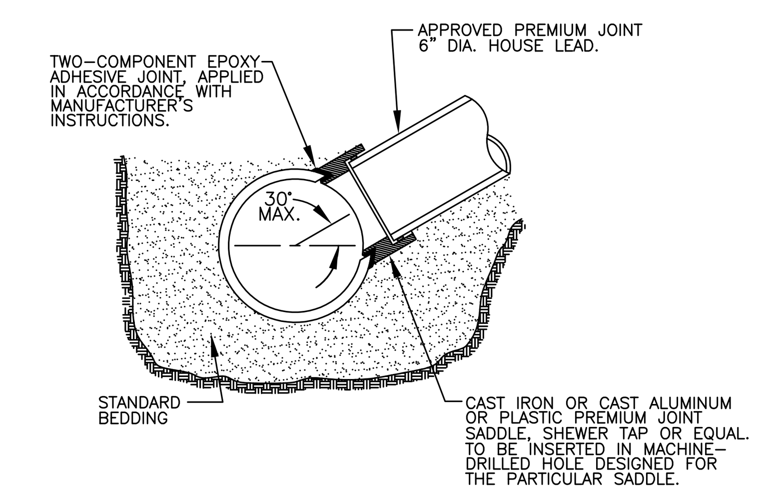


NOTE: SURFACE OF MAIN SEWER SHALL BE CLEANED WITH AN ABRASIVE GRINDER PRIOR TO EPOXY APPLICATION. DUE TO VARIATION OF SET-UP TIME OF EPOXY ADHESIVE WITH TEMPERATURE, ANCHOR STRAPS SHALL BE USED TO SECURE SADDLE IN POSITION IN COLD WEATHER OR WHENEVER WORK IS TO PROCEED PRIOR TO COMPLETE CURE OF EPOXY.

## SHEWER TAP-ALL SIZES OF MAIN SEWER PIPES VITRIFIED CLAY

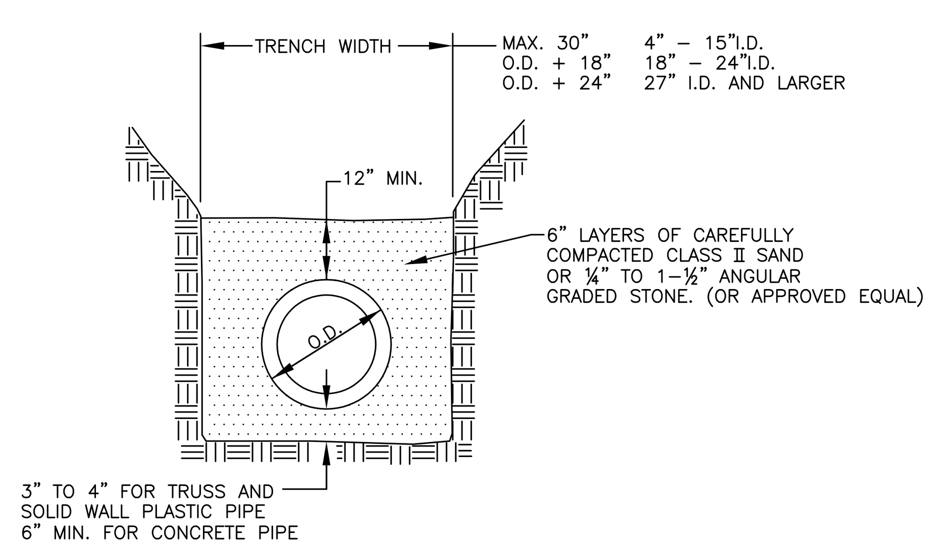


NOTE:
APPROVAL MAY BE GIVEN TO ALTERNATE MATERIALS AND METHODS TO ACHIEVE CLASS B BEDDING.

## STANDARD BEDDING (CLASS B)

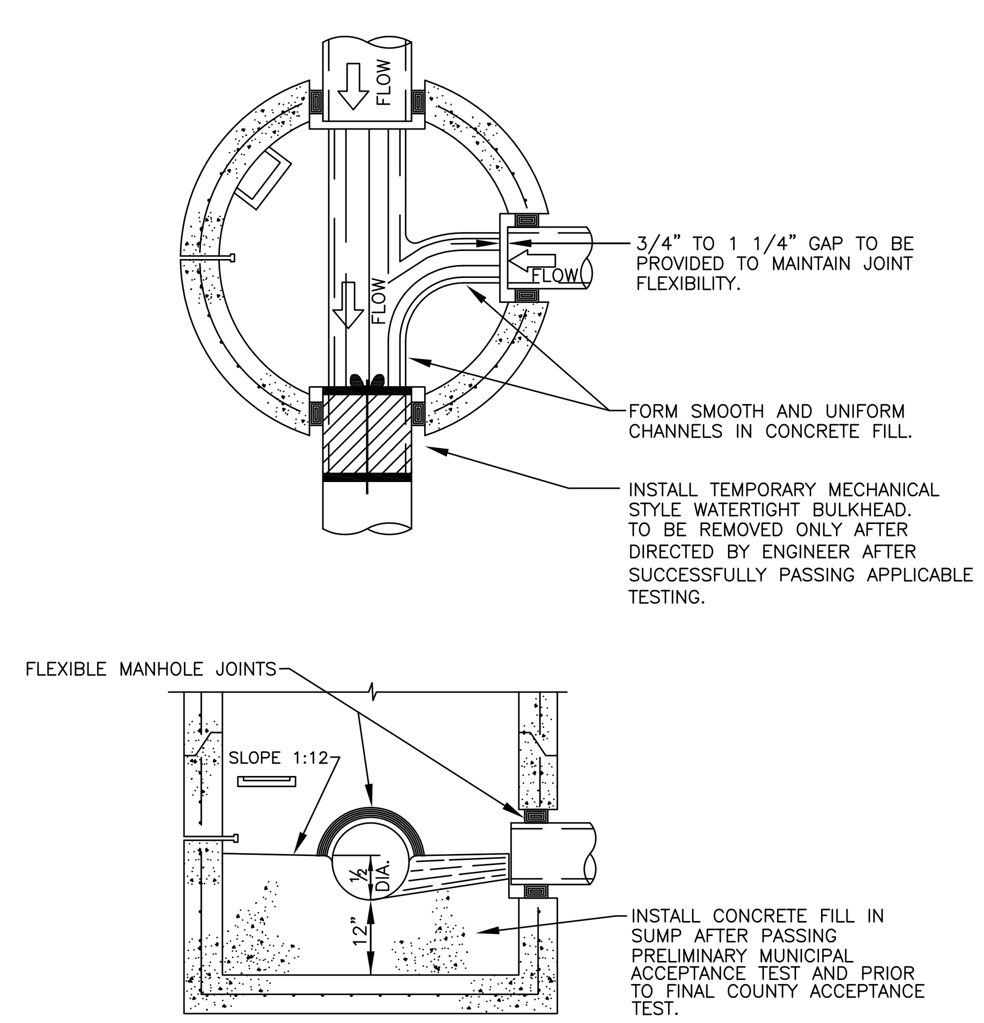


## SUMP MANHOLE FOR TESTING, CLEANING AND DEWATERING

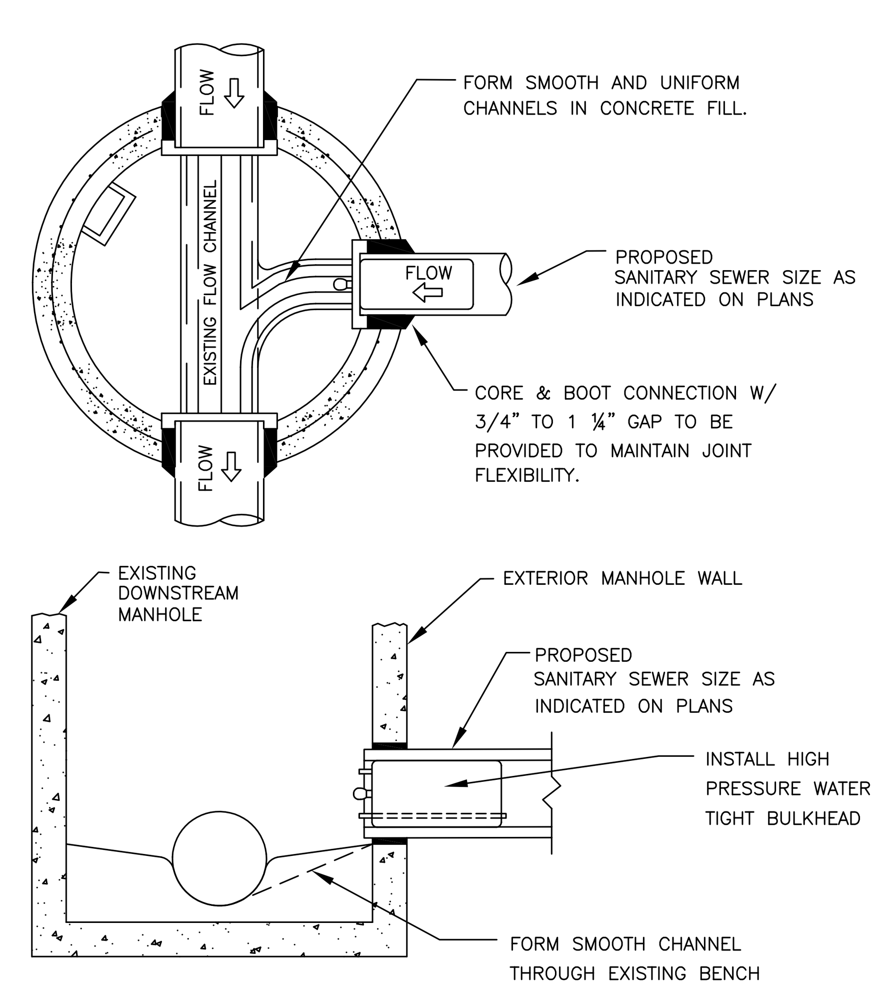


## TESTING BULKHEAD WITH PIPE TAP

ALL HOUSE LEAD PIPE TO BE O.C.D.C. APPROVED MATERIAL AND JOINT.

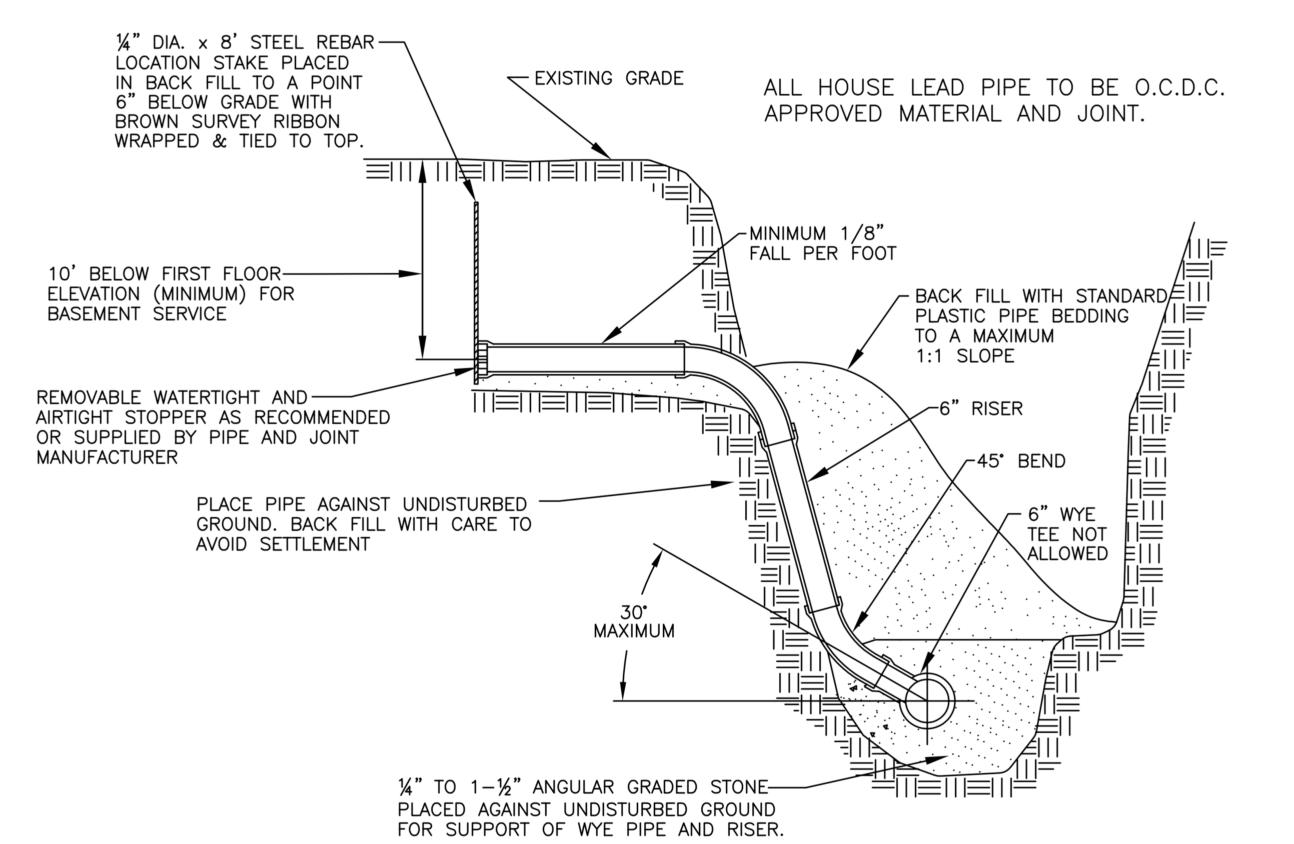


## HOUSE LEAD DETAIL

Plotfile Name: GISQtrs.ctb
File Location: J:\Drain\MappingUnit\STANDARD\DETAILS\AppProductionStandard\Sanitary\Std-San2of2.dwg

**REVISION BLOCK**

Parcel Base / Source Date: N/A

| Rev. No.: | Rev. By: | Rev. Date: | Description: |
|---|---|---|---|
| 1 | DS | 02/03/04 | REVISED SUMP MANHOLE SECTION |
| 2 | DS | 06/28/06 | ADDED TESTING BULKHEAD WITH PIPE TAP DETAIL |

**SANITARY SEWER DETAILS AND NOTES**

| | |
|---|---|
| ORIG. DATE: | 05-09-03 |
| SCALE: | NO SCALE |
| DESIGNED BY: | MWD |
| DRAWN BY: | lz |

OAKLAND COUNTY DRAIN COMMISSIONER
John P. McCulloch

ONE PUBLIC WORKS DRIVE, BLDG 95 WEST
WATERFORD, MICHIGAN
48328-1907

SHEET NO.: 2 of 2

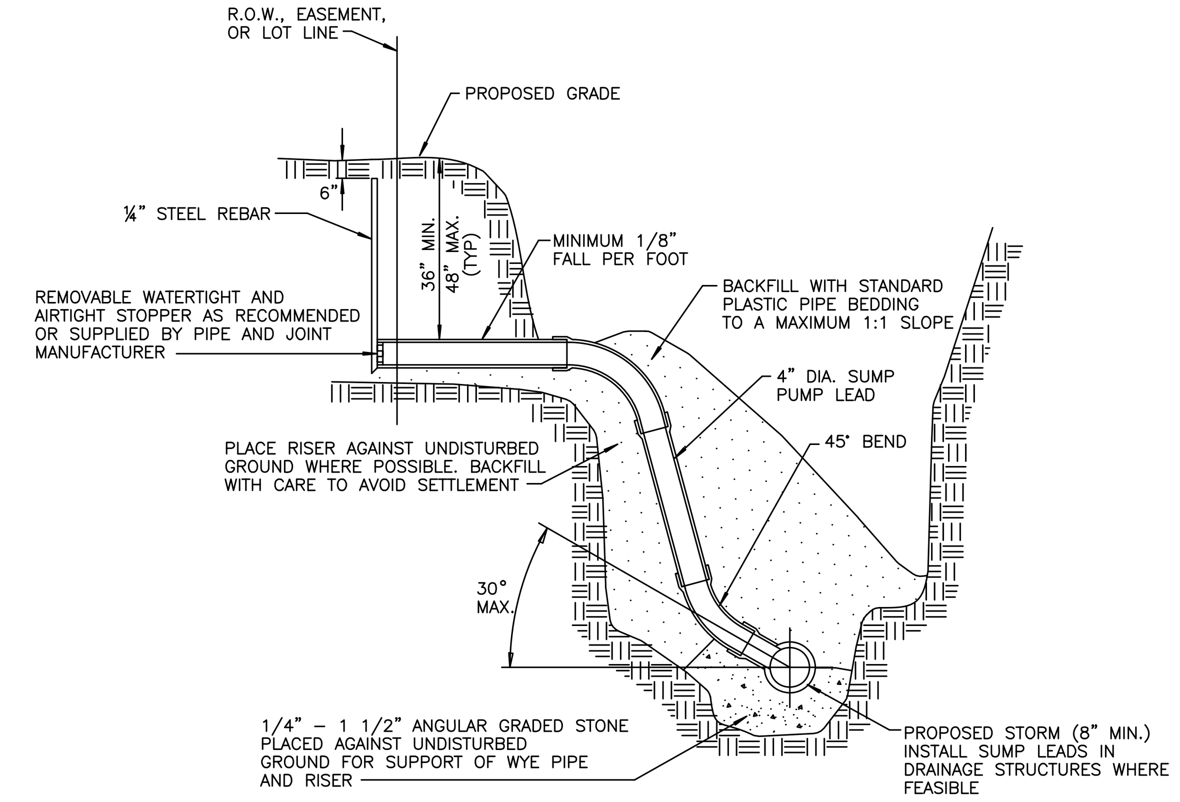


HOUSE LEAD DETAIL FOR 4" DIA. PLASTIC SUMP PUMP LEADS

NO SCALE

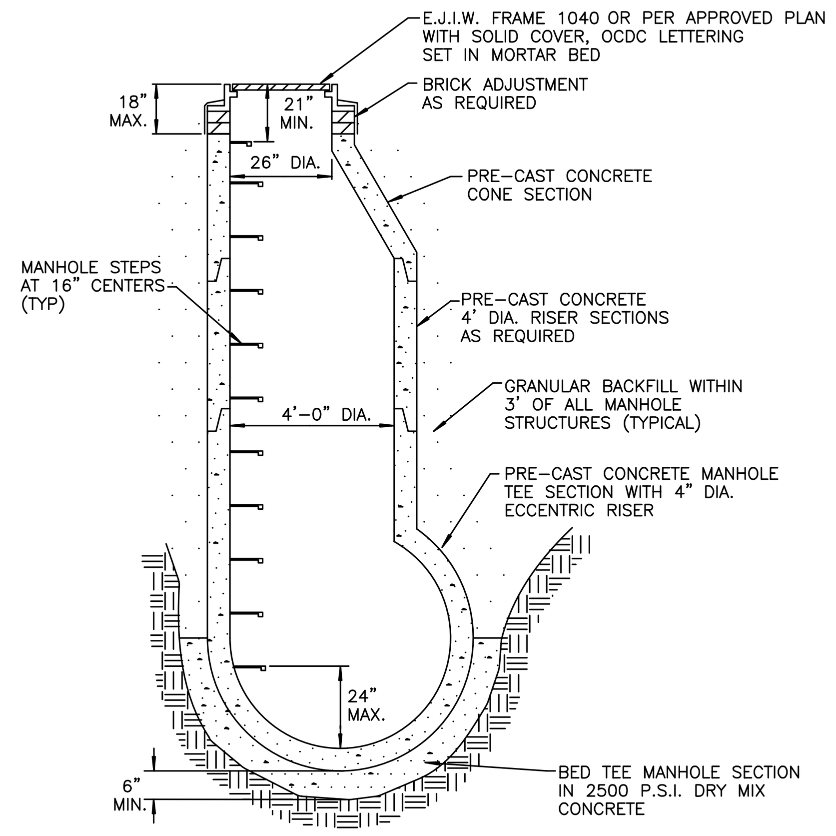


PRE-CAST TEE MANHOLE DETAIL

NO SCALE

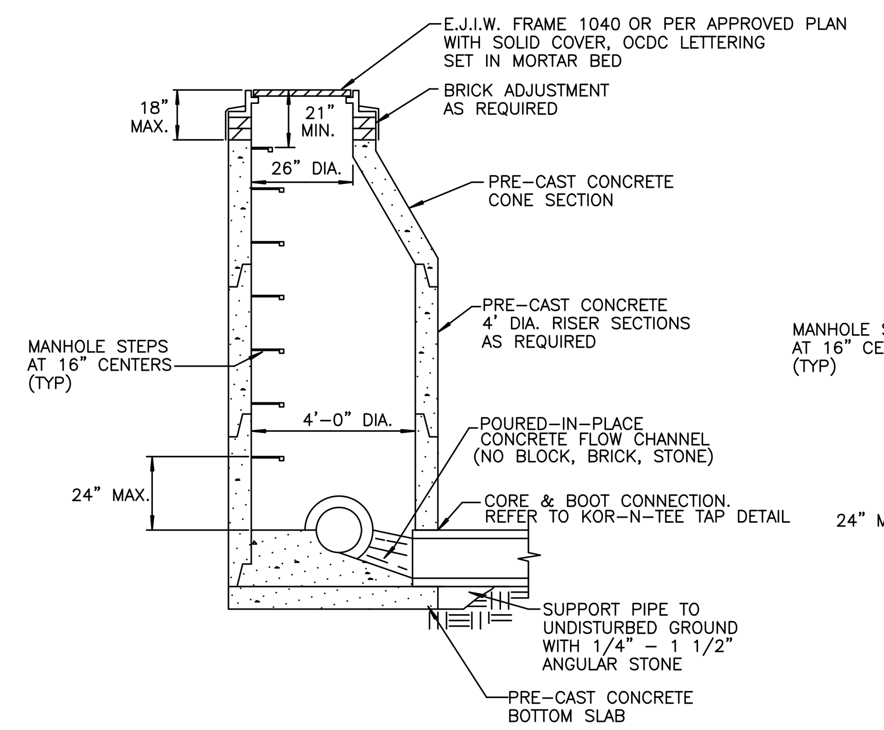


PRE-CAST MANHOLE

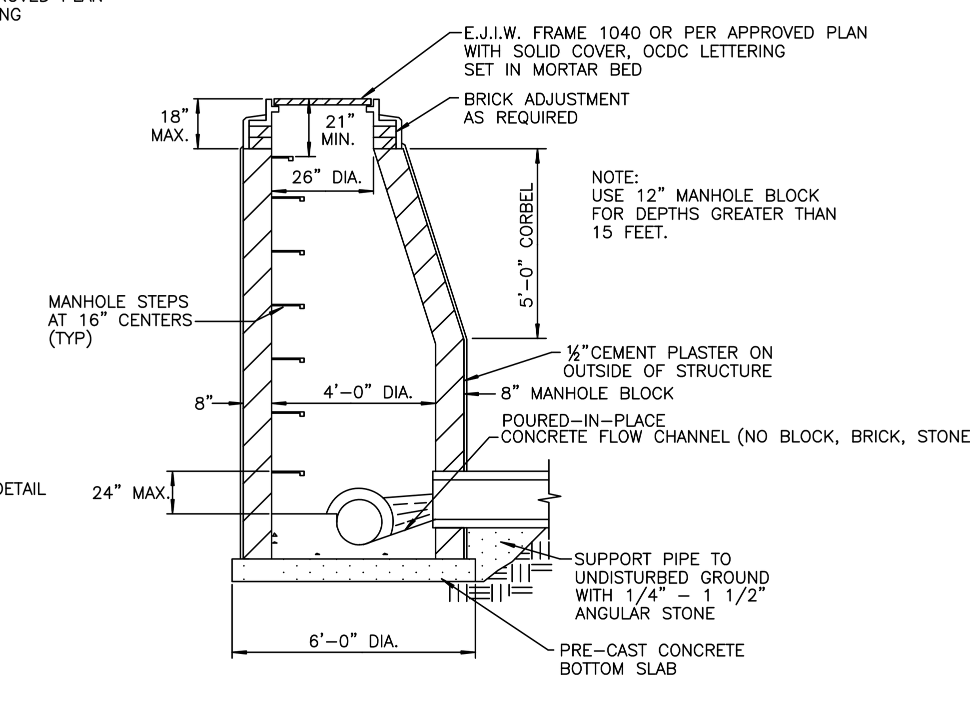


BLOCK MANHOLE (PRIOR APPROVAL ONLY)

STANDARD MANHOLE DETAILS

NO SCALE

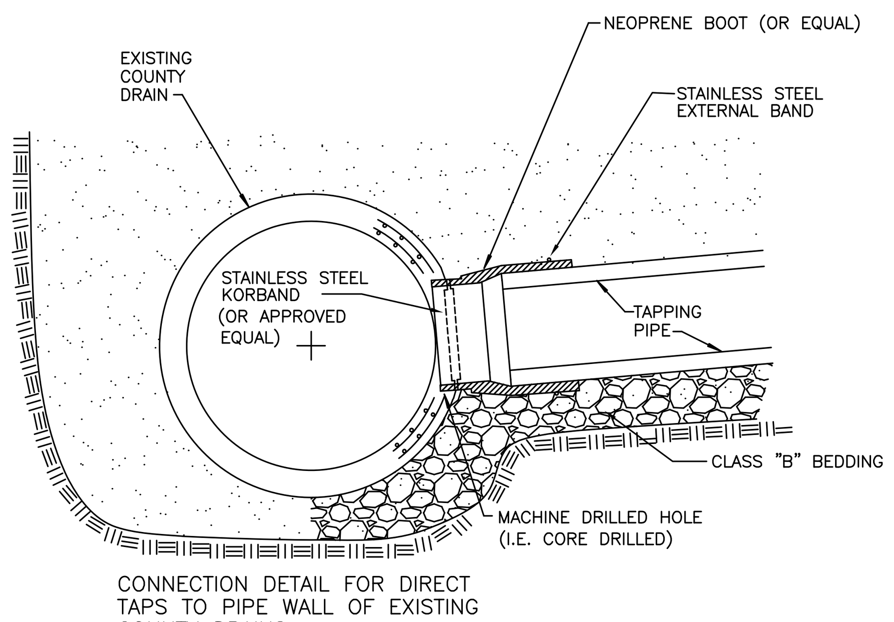


CONNECTION DETAIL FOR DIRECT TAPS TO PIPE WALL OF EXISTING COUNTY DRAINS.

KOR-N-TEE TAP (OR APPROVED EQUAL)

NO SCALE

* For non-concrete to concrete taps.
* Use link-seal, A-lock or approved equal for concrete to concrete taps.

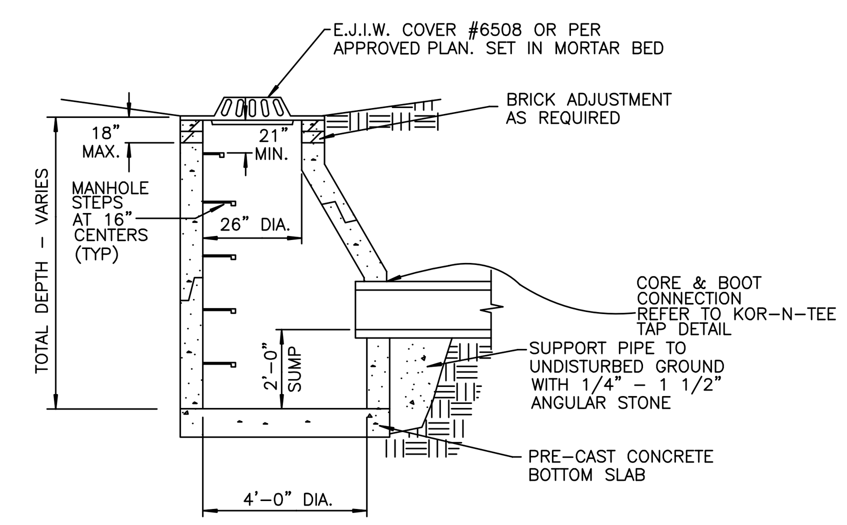


PRE-CAST CATCH BASIN DETAIL

NO SCALE

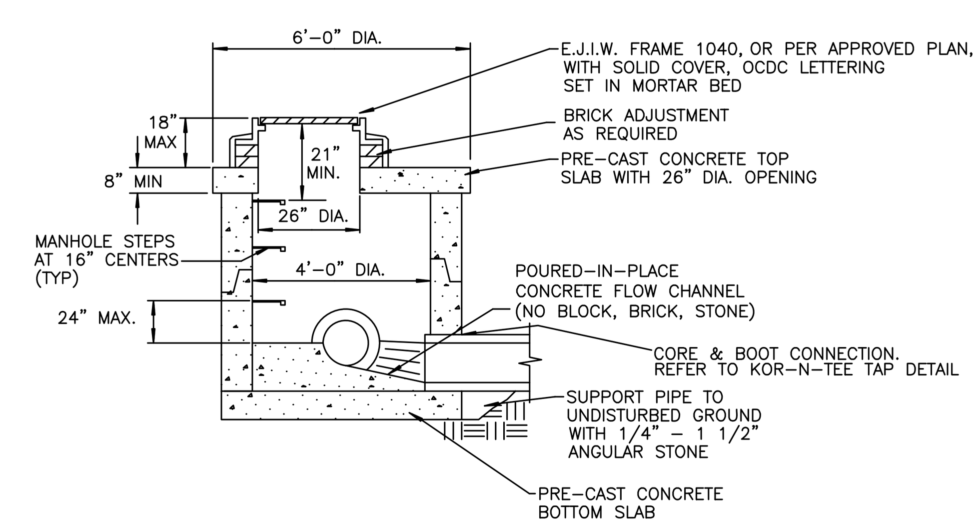


PRE-CAST LOW HEAD MANHOLE DETAIL

NO SCALE

(PRIOR APPROVAL ONLY)

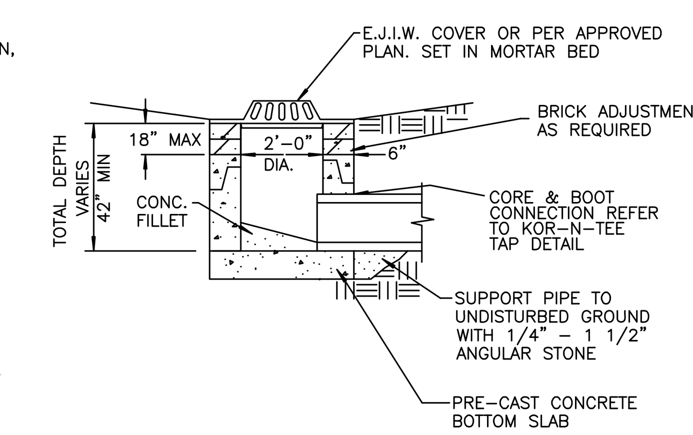


PRE-CAST INLET DETAIL

NO SCALE

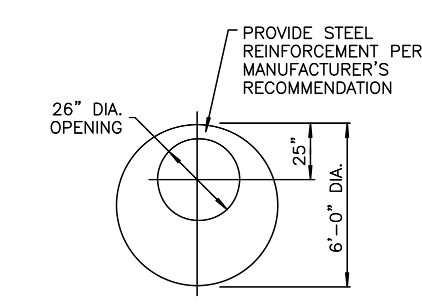


PRECAST CONCRETE TOP SLAB DETAIL

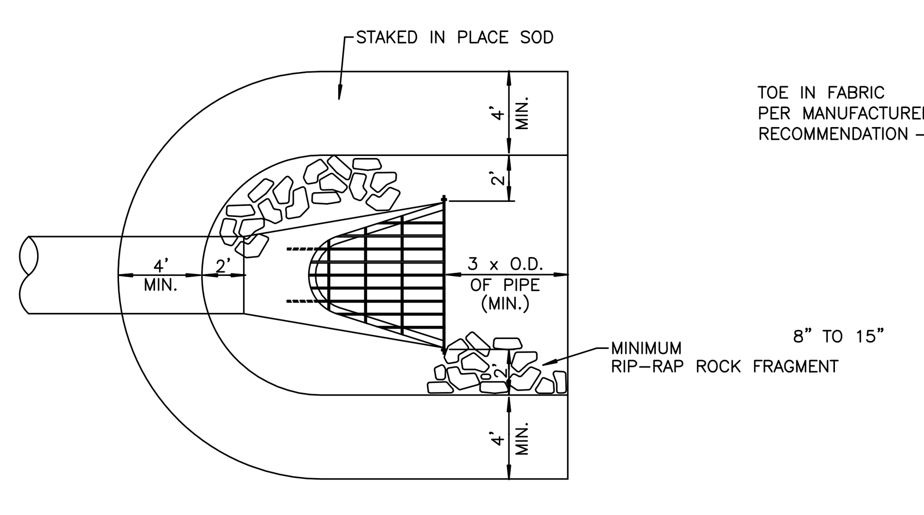


PLAN VIEW

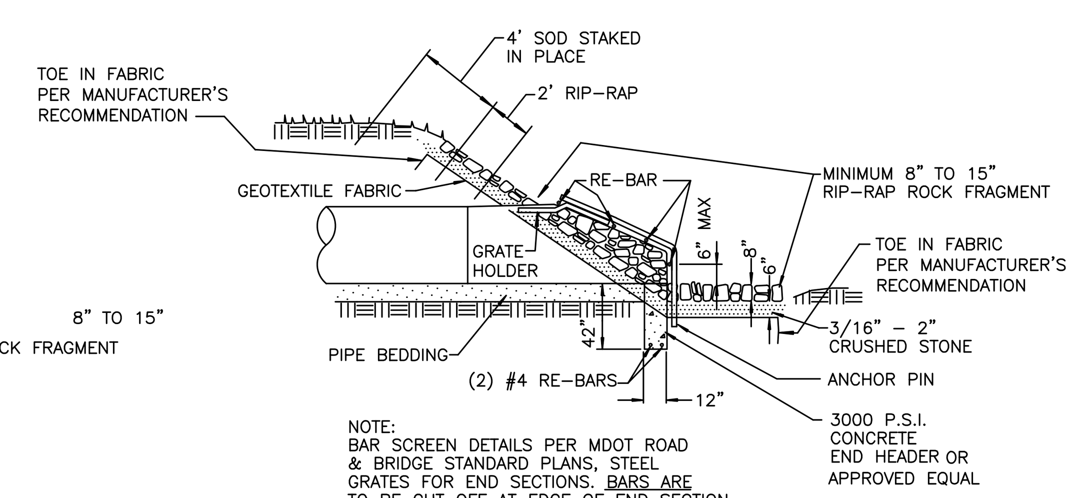


NOTE:
BAR SCREEN DETAILS PER MDOT ROAD & BRIDGE STANDARD PLANS, STEEL GRATES FOR END SECTIONS. <u>BARS ARE TO BE CUT OFF AT EDGE OF END SECTION.</u>

PROFILE VIEW

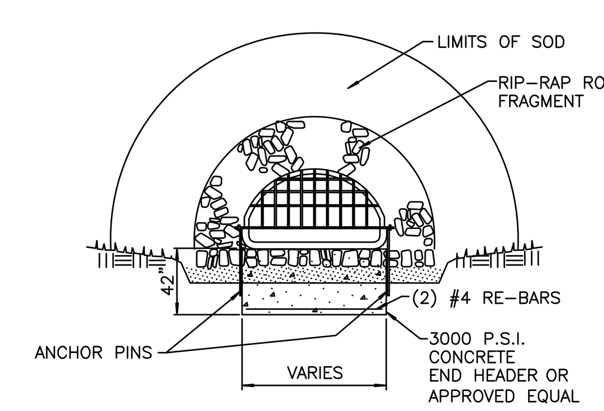


END VIEW

END SECTION AND BAR SCREEN DETAIL

NO SCALE

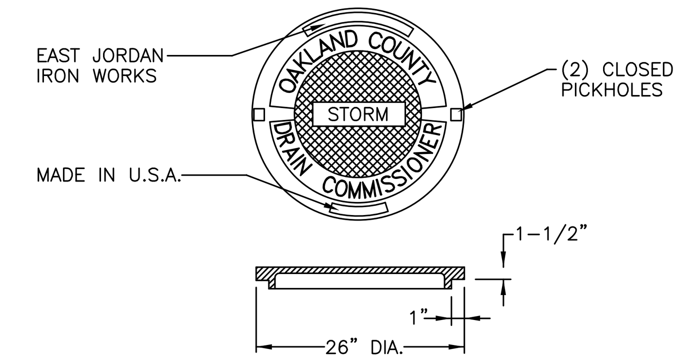


EAST JORDAN IRON WORKS OR APPROVED EQUAL
HEAVY DUTY MATERIAL ASTM A48 CL.35
COVER WT., 150 LBS., CATALOG NO. 1040A
PATTERN NO. 1040A, PRODUCT NO. 1040XX OAKCOSTD.
2" HIGH RAISED LETTERS, 1" WIDE RAISED LETTERS
ALL RECESSED FLUSH.

LETTERED MANHOLE COVER FOR O.C.D.C.

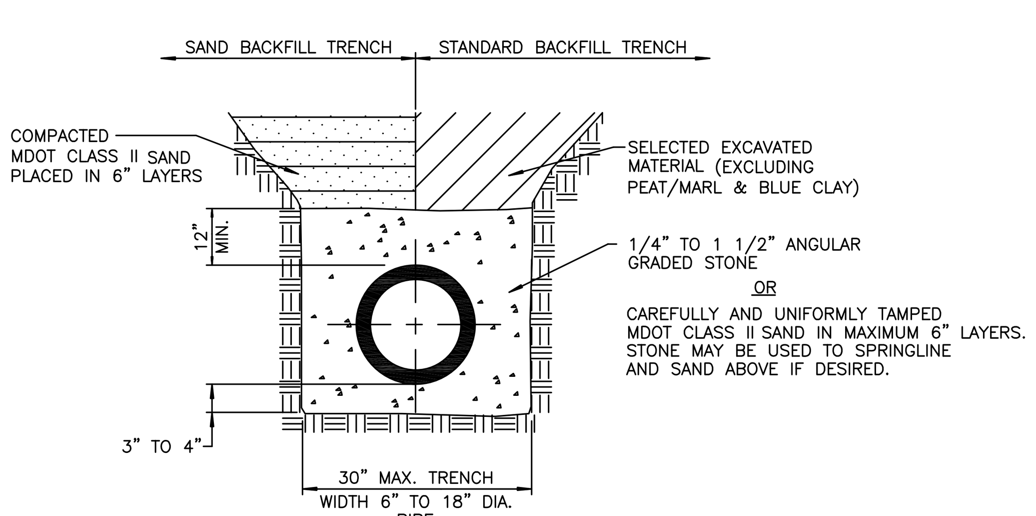


P.V.C., SOLID WALL, ABS, AND TRUSS PIPE BEDDING DETAIL

NO SCALE

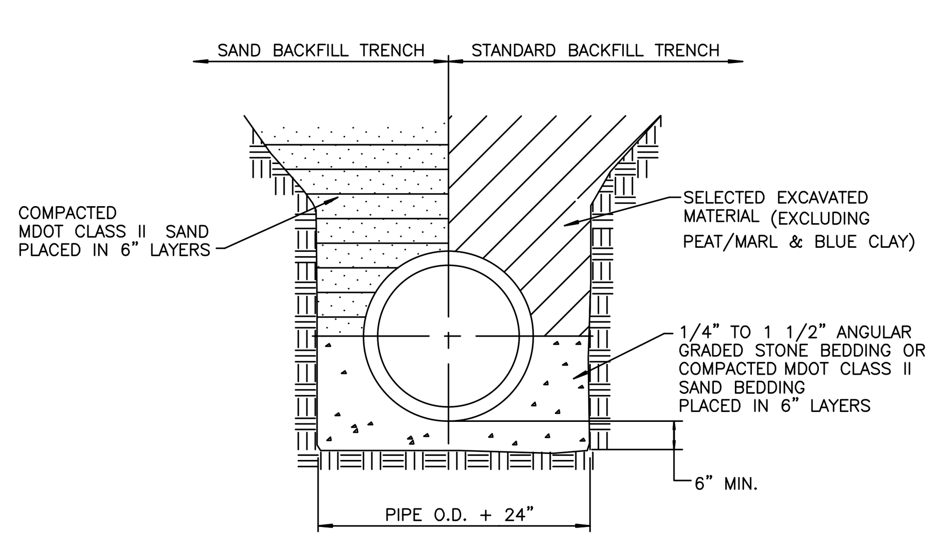


CLASS "B" BEDDING TRENCH DETAIL FOR 27" DIAMETER AND LARGER CONCRETE PIPE

NO SCALE

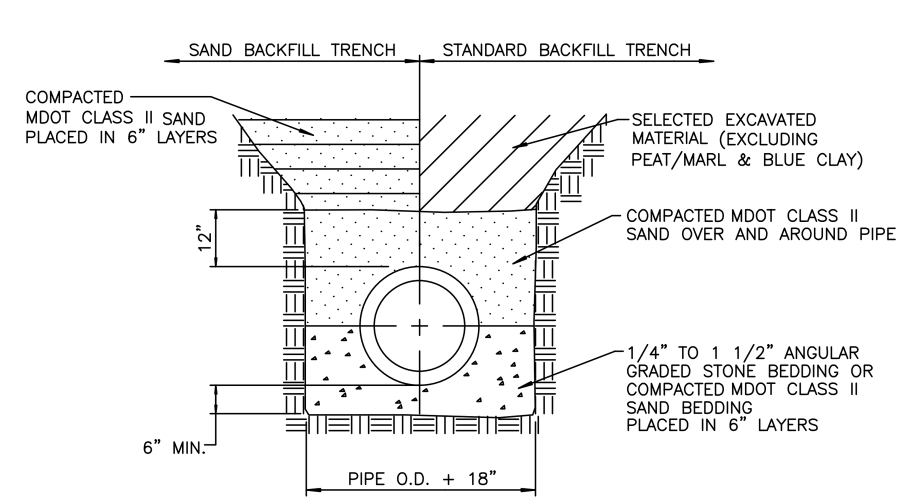


CLASS "B" BEDDING TRENCH DETAIL FOR 24" DIAMETER AND SMALLER CONCRETE PIPE

NO SCALE

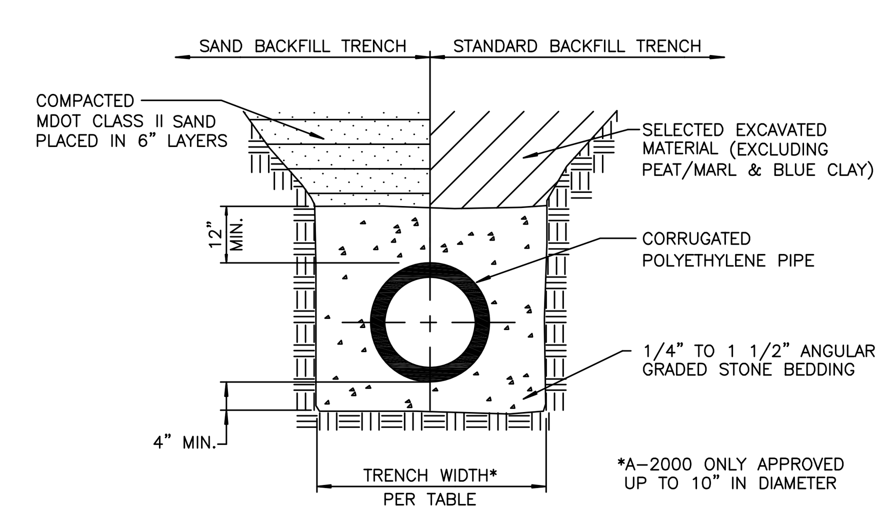


| DIA (IN) | MIN. TRENCH WIDTH (IN) |
|---|---|
| 8 | 25 |
| 10 | 28 |
| 12 | 31 |
| 15 | 34 |
| 18 | 39 |
| 24 | 48 |

ADS N-12 & A-2000 BEDDING DETAIL

NO SCALE

## GENERAL NOTES

1. Type and class of pipe shall be as specified on plans.
2. Class "B" bedding shall be used throughout, unless otherwise specified on the plan.
3. All end sections 18" and larger shall be provided with a bar screen unless otherwise approved.
4. Standard rip-rap shall be 8"–15" fragmented rock, heavy rip-rap shall be 16"–24" fragmented rock. (No Broken Concrete)
5. MANHOLE REQUIREMENTS:
   - All new catch basins, inlets, and manholes are to be manufactured to ASTM C-478 specifications.
   - All new catch basins, inlets, and manholes shall have OCDC approved flexible, watertight seals where pipes pass through walls. Manholes shall be of precast sections with modified groove tongue and rubber gasket type joints. Pre cast manhole cone sections shall be OCDC approved modified eccentric cone type.
   - Taps through manhole joints or cone sections are prohibited unless otherwise approved.
   - Manhole steps to be plastic coated steel meeting the requirements in ASTM D 2146, Type II, Grade 49108, MA. Industries P.S.I. Polypropylene, (or approved equal). Steps to be installed during manhole manufacture. Place at 16" centers 45° from centerline of sewer.
   - Cone section with modified groove tongue joints and with stud inserts cast in place. Top to have flush surface.
   - ASTM C-478 riser section with modified groove tongue joints.
   - Res-seal, link-seal, press wedge II, or kor-n-seal boot (with stainless steel korband) flexible rubber manhole joints. (or approved equal).
6. CONCRETE PIPE REQUIREMENTS:
   - Concrete pipe to be per ASTM C76 standards.
   - It will be required to TV all pipe 30 days after installation
   - The contractor shall provide reinforced concrete pipe as specified on the plans.
   - All reinforced concrete pipe shall have modified grooved tongue joints with o-ring type rubber gasket, per A.S.T.M. specifications C443.
7. FLEXIBLE (PLASTIC) PIPE REQUIREMENTS:
   - The completed installation of all flexible pipe shall at no point have out-of-round pipe deflections greater than 5% of normal diameter of pipe. Deflection testing shall be done with a nine point mandrel a minimum 30 days after installation and again at 1 year after installation. It will also be required to TV all pipe 30 days and again 1 year after installation. A proving ring to verify mandrel must be provided prior to testing.
   - Flexible culverts will not be permitted under roads.
8. CORRUGATED POLYETHYLENE (ADS N-12) PIPE REQUIREMENTS:
   - ADS N-12 WT pipe shall be smooth-lined specified per ASTM F667, AASHTO M294, and AASHTO M252.
   - Joints, pipes, and fittings shall be watertight as specified per ASTM D3212 and ASTM F1417. Gasket joints shall be installed in accordance with procedures specified by the pipe manufacturer.
   - 8" through 24" are the only pipe diameters accepted.
9. SUMP PUMP LEAD REQUIREMENTS:
   - All sump pump leads connected to a County Drain pipe shall be pre-manufactured.
   - Sump pump leads connected to a manhole shall be cored and booted. Refer to Kor-N-Tee Tap Detail.
   - Sump pump mains and leads shall be a (1) SDR 35, non-perforated, solid wall PVC, (2) Truss Pipe, (3) A-2000 or (4) approved equal, with premium joints.
   - Ends of all 4" sump pump leads shall be temporarily capped and their location staked, witnessed and recorded.
   - All sump pump leads to be taken to the property line, easement line or as indicated on the plan.
   - Sump pump mains must have a cleanout with a minimum inside diameter of 24" and be constructed at changes of alignment, ends of sump pump mains or as indicated on the plan.
10. RESTORATION REQUIREMENTS:
    All disturbed area within the County Drain right-of-way shall be restored as follows:
    - Under roads, sidewalks, driveways and parking areas, backfill material shall be placed loosely into trenches in six (6) inch layers with each layer compacted to not less than 95% of maximum dry density as determined by the ASTM D 1557 Compaction Standard (modified proctor compaction test). All other areas shall have each layer compacted to not less than 90% of maximum dry density.
    - Finish subgrade
    - Place 3" thickness clean topsoil acceptable to the engineer to attain finished grade. Topsoil must not be contaminated and may not be a mixture of natural underlying soils, subbase materials, or other materials. It must consist of natural loam, sandy loam, silty loam or clay loam humus-bearing soil adapted to the sustenance of plant life. Topsoil must be neither excessively acidic nor excessively alkaline. It must be of mineral origin, exclusive of any peat or muck.
    - Apply seed and fertilizer as follows:*

| Location | Seeding Requirements | Fertilizer Requirement |
|---|---|---|
| Slopes and Ditch, Banks, Etc. | M.D.O.T. "Roadside Mix" Turf Seed Mixture TGM (10% Kentucky Blue, 20% Perennial Rye, 30% Hard Fescue, 40% Creeping Red Fescue) applied at 220 lb/acre | M.D.O.T. Seeding and Sodding Fertilizers, Class A |
| Other Areas | M.D.O.T. "Roadside Mix" Turf Seed Mixture THM (30% Kentucky Blue, 20% Perennial Rye, 50% Creeping Red Fescue) applied at 220 lb/acre | M.D.O.T. Seeding and Sodding Fertilizers, Class A |

* Sod is required in maintained lawn areas. Refer to OCDC General Specifications for additional requirements and information.

- apply straw or marsh hay mulch in an air-dry condition to all seeded areas over the surface to a uniform thickness at 2 tons/acre.
- mulch shall be anchored in place with biodegradable netting, not larger than 1½" by 2" nor smaller than ½" by ½".
- The contractor shall be responsible to insure the growth of all seeded areas, and shall re-seed as necessary to accomplish this.

Plotfile Name: GISQtrs.ctb
File Location: H:\STANDARD\DETAILS\AppProductionStandard\StormDrain\Std-Stm.dwg

# STORM DRAIN NOTES
AND
**DETAILS**

**REVISION BLOCK**

Data Source / Source Date: N/A

| Rev. No.: | Rev. By: | Rev. Date: | Description: |
|---|---|---|---|
| 1 | lz | 6/17/05 | MERGED PROPOSED NOTES/DETAILS TO STANDARD DETAIL SHEET PER APPROVAL FROM STANDARDS COMMITTEE |
| 2 | | | |
| 3 | | | |
| 4 | | | |

| | |
|---|---|
| ORIG. DATE: | 05/05/97 |
| SCALE: | NONE |
| DESIGNED BY: | OCDC |
| DRAWN BY: | OCDC Mapping |

OAKLAND COUNTY DRAIN COMMISSIONER
John P. McCulloch

ONE PUBLIC WORKS DRIVE, BLDG 95 WEST
WATERFORD, MICHIGAN
48328-1907

SHEET NO.: 1 of 1

# GATE VALVE & WELL DETAILS

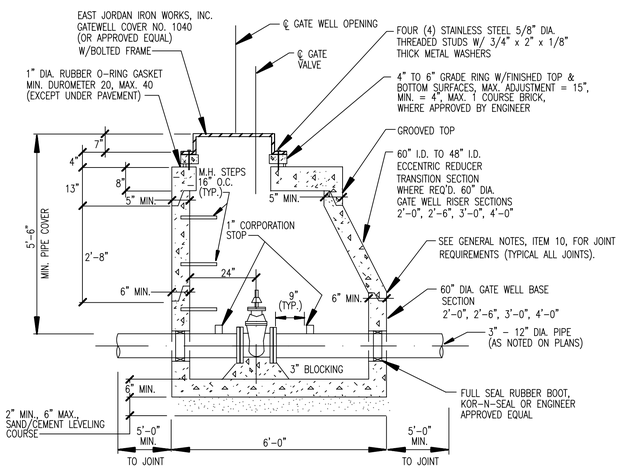


## 3" THRU 12" GATE WELL

SCALE 1"= 2'

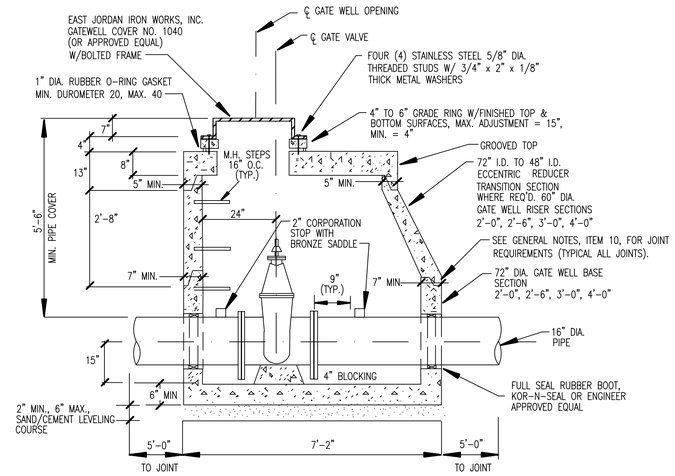


## 16" GATE WELL

SCALE 1"= 2'

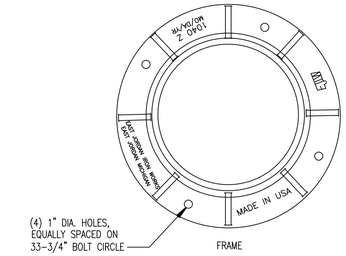


FRAME

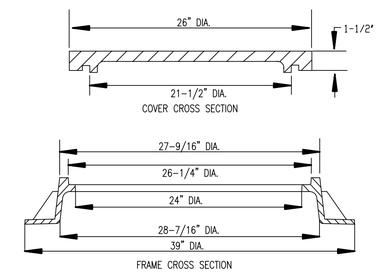


## FRAME

NO SCALE

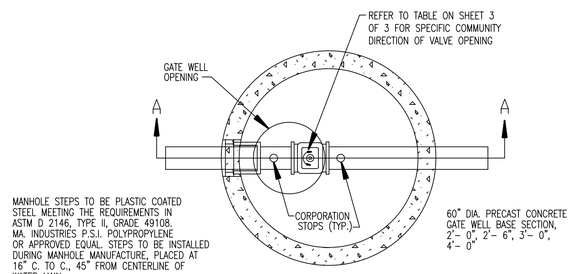


## PLAN GATE WELL TYPICAL

SCALE 1"= 2'

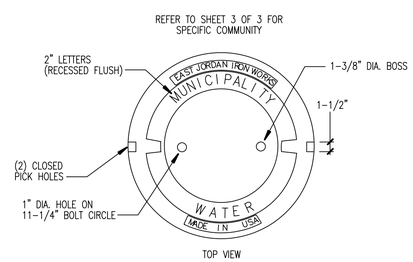


TOP VIEW

## LETTERING LAYOUT FOR GATEWELL COVERS

SCALE 1"= 6'

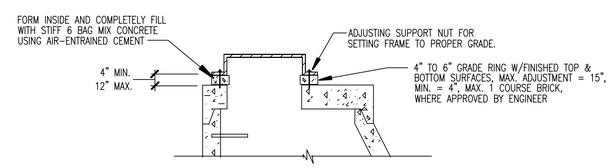


## GATE WELL TOPS WITHIN PAVEMENT AREAS

SCALE 1"= 2'

RUBBER O'RINGS SHALL
NOT BE USED IN PAVEMENT

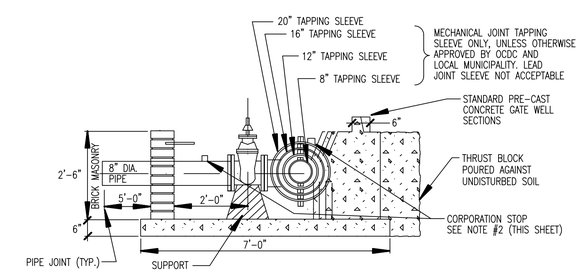


## 20" x 8", 16" x 8", 12" x 8", 8" x 8" TAPPING SLEEVE, VALVE & WELL

SCALE 1"= 2'

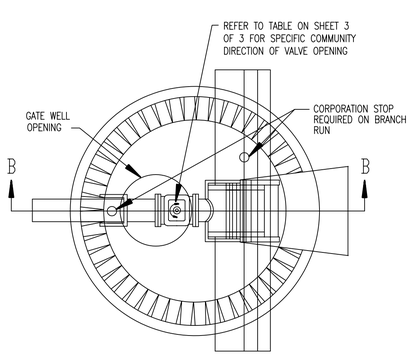


## PLAN TAPPING SLEEVE VALVE & WELL (TYPICAL)

SCALE 1"= 2'

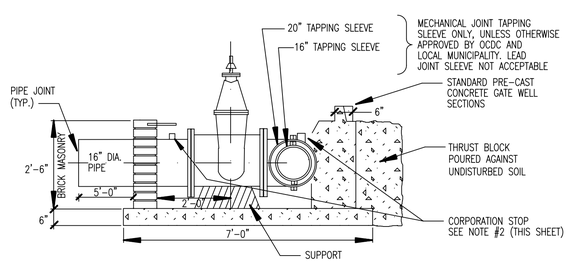


## 20" x 16", 16" x 16", TAPPING SLEEVE, VALVE & WELL

SCALE 1"= 2'

NOTES:
1. REFER TO NOTE 7 OF "VALVE AND SLEEVE NOTES" ON SHEET 3 OF 3.
2. FOR PIPE SMALLER THAN 16" USE 1" CORPORATION STOP, FOR 16" PIPE OR LARGER USE 2" CORPORATION STOP WITH BRONZE SADDLE.
3. REFER TO NOTE 11 OF "GENERAL NOTES" ON SHEET 3 OF 3.

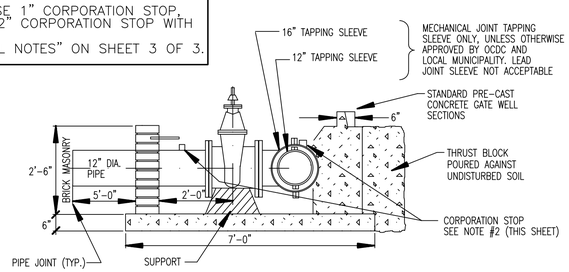


## 16" x 12", 12" x 12", TAPPING SLEEVE, VALVE & WELL

SCALE 1"= 2'

# TAPPING SLEEVE GATE VALVE & WELL DETAILS

**WATER MAIN**
**STANDARD DETAILS**

REVISION BLOCK
Data Source / Source Date: N/A

| Rev. No.: | Rev. By: | Rev. Date: | Description: |
|---|---|---|---|
| 1 | LJC | 10/2001 | NOTE UPDATES |
| 2 | LJC | 10/27/01 | NOTE UPDATES PER REVIEW |
| 3 | RRH | 06/05/02 | NOTE UPDATES |
| 4 | | | |

| | |
|---|---|
| ORIG. DATE: | 01/01/01 |
| SCALE: | NONE |
| DESIGNED BY: | OCDC |
| DRAWN BY: | OCDC Mapping |

OCDC
OAKLAND COUNTY DRAIN COMMISSIONER
Andrew R. Kuhn, P.E., L.S., C.F.M.

ONE PUBLIC WORKS DRIVE, BLDG 95 WEST
WATERFORD, MICHIGAN
48328-1907

SHEET NO.: 1 of 3

File Name: GEOTALK
Path: G:\ENGINEERING\STANDARDS\CAD FILES\Sewer\Sewer Details.dwg

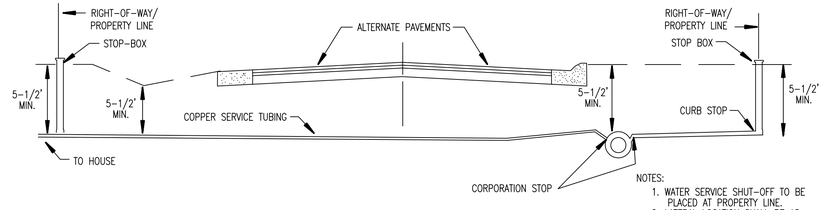


NOTES:
1. WATER SERVICE SHUT-OFF TO BE PLACED AT PROPERTY LINE.
2. LATERAL LOCATION SHALL BE AS REQUESTED BY THE ABUTTING PROPERTY OWNER.

## TYPICAL PUBLIC ROAD WATER SERVICE CONNECTION

NO SCALE

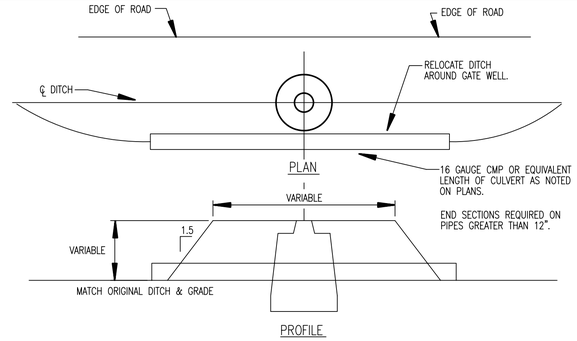


## DITCH ENCLOSURE AT GATE WELL

NO SCALE

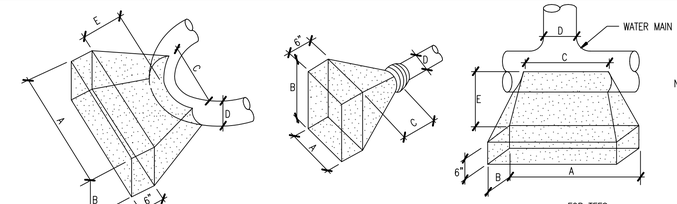


NOTE:
3000 PSI CONCRETE TO BE USED. THRUST BLOCK TO ABUT & REST AGAINST UNDISTURBED SOIL OR EARTH COMPACTED TO 95% MODIFIED PROCTER.

FOR 90° BENDS OR SMALLER

| D | A | B | C | E MIN. |
|---|---|---|---|---|
| 20" | 8' | 6.5' | 3.5' | 2.5' |
| 16" | 6' | 4' | 2.5' | 2' |
| 12" | 4' | 3' | 2' | 1.75' |
| 10" | 3' | 3' | 2' | 1.75' |
| 8" | 3' | 2' | 2' | 1.5' |
| 6" | 2' | 1.5' | 2' | 1.25' |

FOR PLUGS

| D | A | B | C MIN. |
|---|---|---|---|
| 20" | 7' | 5' | 2.5' |
| 16" | 4'-10" | 4'-10" | 2' |
| 12" | 4'-4" | 3' | 1'-9" |
| 10" | 3' | 2' | 1'-6" |
| 8" | 2'-10" | 2'-6" | 1'-6" |
| 6" | 1'-6" | 1'-6" | 3' |

FOR TEES

| D | A | B | C | E MIN. |
|---|---|---|---|---|
| 20" | 6.5' | 4.5' | 3.5' | 3' |
| 16" | 4'-8" | 4'-8" | 2.5' | 2.75' |
| 12" | 4' | 3' | 2.5' | 2.5' |
| 10" | 3' | 2' | 2' | 2.25' |
| 8" | 2'-6" | 2' | 2' | 2.25' |
| 6" | 2' | 2' | 2' | 2.25' |

## THRUST BLOCK DETAILS

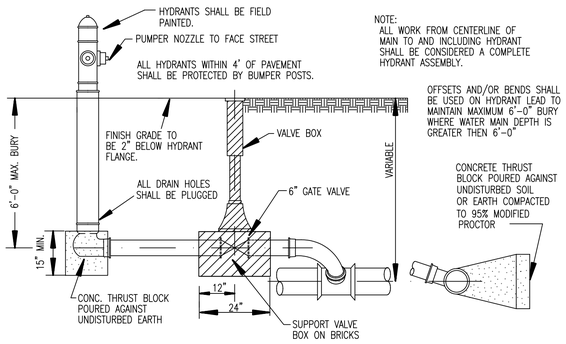


NOTE:
ALL WORK FROM CENTERLINE OF MAIN TO AND INCLUDING HYDRANT SHALL BE CONSIDERED A COMPLETE HYDRANT ASSEMBLY.

OFFSETS AND/OR BENDS SHALL BE USED ON HYDRANT LEAD TO MAINTAIN MAXIMUM 6'-0" BURY WHERE WATER MAIN DEPTH IS GREATER THEN 6'-0"

## SECTION 6" HYDRANT SIDE OUTLET

SCALE 1"= 2'

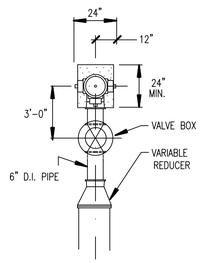


## PLAN 6" HYDRANT WATER MAIN END

SCALE 1" = 1'

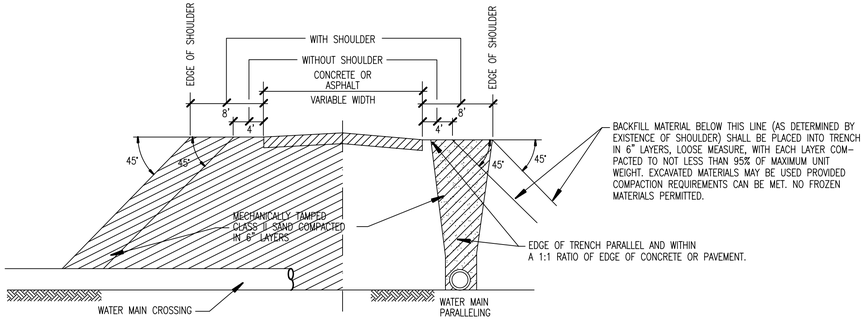


BACKFILL MATERIAL BELOW THIS LINE (AS DETERMINED BY EXISTENCE OF SHOULDER) SHALL BE PLACED INTO TRENCH IN 6" LAYERS, LOOSE MEASURE, WITH EACH LAYER COMPACTED TO NOT LESS THAN 95% OF MAXIMUM UNIT WEIGHT. EXCAVATED MATERIALS MAY BE USED PROVIDED COMPACTION REQUIREMENTS CAN BE MET. NO FROZEN MATERIALS PERMITTED.

EDGE OF TRENCH PARALLEL AND WITHIN A 1:1 RATIO OF EDGE OF CONCRETE OR PAVEMENT.

## MINIMUM BACKFILL UNDER OR NEAR PAVEMENT

SCALE 1"= 6'

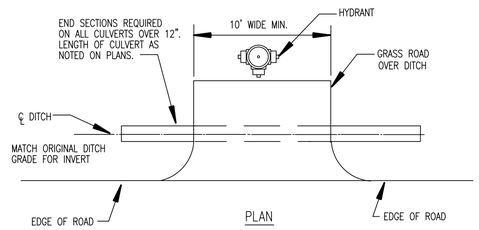


## DITCH ENCLOSURE AT HYDRANT

NO SCALE

NOTE:
ALL HYDRANTS TO BE FULLY RESTRAINED BY MECHANICAL JOINTS APPROVED BY ENGINEERS. THRUST BLOCKS ALSO REQUIRED.

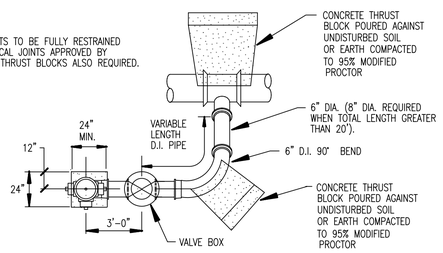


## PLAN 6" HYDRANT SIDE OUTLET

SCALE 1" = 1'

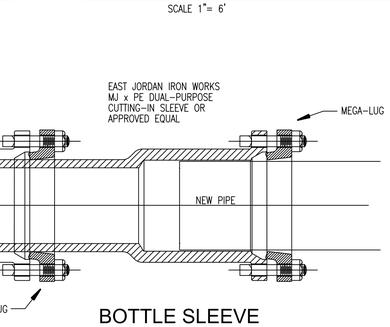


## BOTTLE SLEEVE

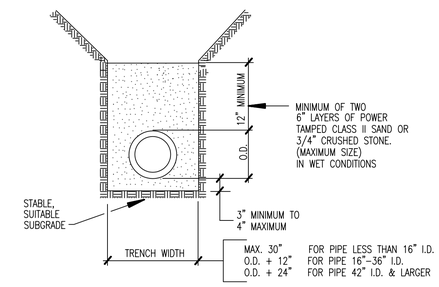


## STANDARD BEDDING FOR WATER MAIN

SCALE 1" = 4'

POST TO BE EQUAL OR UP TO 6" ABOVE TOP OF HYDRANT. PAINT WITH HIGH VISIBILITY YELLOW.

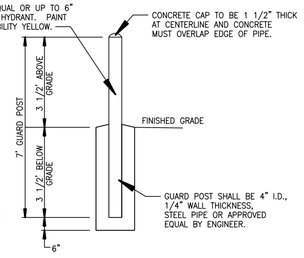


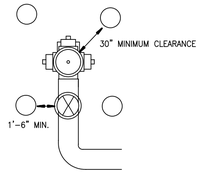


NOTES:
1. GUARD POST SHALL NOT INTERFERE WITH HYDRANT OPERATION
2. TO BE INSTALLED IN ALL PAVED AREAS WHERE VEHICLE EQUIPMENT DAMAGE TO HYDRANT IS POSSIBLE.

## GUARD POST

SCALE 1"= 3'

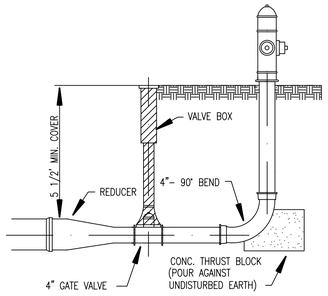


## DEAD END BLOWOFF CONNECTION

SCALE 1" = 1'

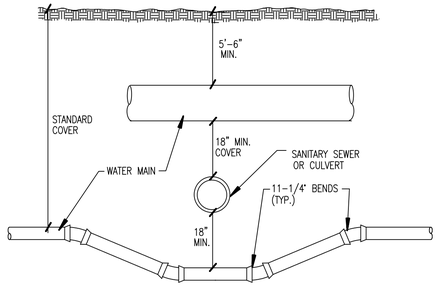


## SEWER OR CULVERT CROSSING

SCALE 1"= 2'

## HYDRANT & BLOWOFF DETAILS

# WATER MAIN
## STANDARD DETAILS

REVISION BLOCK
Data Source / Source Date: N/A

| Rev. No. | Rev. By: | Rev. Date: | Description: |
|---|---|---|---|
| 1 | LJC | 10/27/01 | NOTE UPDATES PER REVIEW |
| 2 | RRH | 06/06/02 | NOTE AND DETAIL UPDATE |
| 3 | | | |
| 4 | | | |

| | |
|---|---|
| ORIG. DATE: | 01/01/01 |
| SCALE: | NONE |
| DESIGNED BY: | OCDC |
| DRAWN BY: | OCDC Mapping |

OCDC
OAKLAND COUNTY DRAIN COMMISSIONER
Jim P. McCulloch

ONE PUBLIC WORKS DRIVE, BLDG 95 WEST
WATERFORD, MICHIGAN
48328-1907

SHEET NO.: 2 of 3

File Name: 1207Drw05
Date/Time: 12/17/2007 2:07:18 PM Administrator/Desktop/Jim/

# GENERAL NOTES

1. ALL CONSTRUCTION PROCEDURES AND MATERIALS SHALL CONFORM TO THE CURRENT STANDARDS AND SPECIFICATIONS OF THE OAKLAND COUNTY DRAIN COMMISSIONER AND/OR THE LOCAL MUNICIPALITY.
2. THE CONTRACTOR SHALL OBTAIN AN OAKLAND COUNTY DRAIN COMMISSIONER WATER INSPECTION PERMIT PRIOR TO THE START OF CONSTRUCTION. SEE CORRESPONDING WATER MAIN CONSTRUCTION PERMIT REQUEST LETTER FOR COST OF THE PERMIT.
3. A PRE-CONSTRUCTION MEETING SHALL BE HELD PRIOR TO THE START OF CONSTRUCTION AND SHALL BE SCHEDULED BY THE LOCAL MUNICIPAL ENGINEER. THOSE IN ATTENDANCE SHALL INCLUDE 1) LOCAL MUNICIPAL ENGINEER, 2) DESIGN ENGINEER, 3) OWNER/DEVELOPER, 4) ROAD COMMISSION FOR OAKLAND COUNTY, 5) OAKLAND COUNTY DRAIN COMMISSIONER (WATER, SEWER AND STORM DIVISIONS) AND 6) ALL UTILITY COMPANIES. CONTRACTOR SHALL PROVIDE MATERIALS LISTING FOR APPROVAL BY MUNICIPAL ENGINEER AND O.C.D.C.
4. CONTRACTOR MUST CONTACT MISS DIG (1-800-482-7171) THREE WORKING DAYS BEFORE THE START OF CONSTRUCTION FOR UNDERGROUND UTILITY LOCATIONS. ALL UTILITIES SHALL BE STAKED BEFORE CONSTRUCTION STARTS.
5. ALL NECESSARY EASEMENTS FOR WATER MAINS SHALL BE PROVIDED IN THE NAME OF THE OWNER OF THE WATER MAIN PRIOR TO CONSTRUCTION AND ACCEPTANCE OF THE WATER DISTRIBUTION SYSTEM FOR OPERATION.
6. ALL WATER MAINS SHALL BE CONSTRUCTED WITH A MINIMUM COVER OF FIVE AND ONE-HALF (5-1/2) FEET BELOW FINISHED GRADES INCLUDING OPEN DRAINAGE COURSES.
7. ALL TRENCHES UNDER OR WITHIN A 1:1 RATIO OF EXISTING OR PROPOSED PAVEMENT OR DRIVEWAYS SHALL BE BACKFILLED WITH THOROUGHLY COMPACTED CLASS II SAND TO GRADE (95% MAXIMUM UNIT DENSITY).
8. WHERE TWO UTILITIES CROSS, PROVIDE CLASS II BACKFILL MATERIAL IN TWELVE (12) INCH COMPACTED LAYERS TO THE UNDERSIDE OF THE HIGHER UTILITY.
9. WHERE WATER MAINS MUST DIP TO PASS UNDER OTHER UTILITIES, THE SECTIONS WHICH ARE DEEPER THAN NORMAL SHALL BE KEPT TO A MINIMUM LENGTH AND SHALL BE CONSTRUCTED WITH ELEVEN AND ONE-QUARTER (11-1/4) DEGREE VERTICAL BENDS, PROPERLY ANCHORED.
10. ALL PRECAST CONCRETE GATE WELL SECTIONS SHALL BE MANUFACTURED TO CONFORM WITH A.S.T.M. C478, STANDARD SPECIFICATIONS FOR PRECAST REINFORCED CONCRETE MANHOLE SECTIONS, EXCEPT WALL THICKNESS SHALL BE AS SHOWN ON THESE DETAILS. ALL JOINTS FOR PRECAST CONCRETE GATE WELL SECTIONS SHALL BE "MODIFIED GROOVE TONGUE" WITH GASKET MANUFACTURED TO CONFORM WITH A.S.T.M. C 443, STANDARD SPECIFICATION FOR JOINTS FOR CIRCULAR CONCRETE SEWER AND CULVERT PIPE USING RUBBER GASKETS.
11. CONTRACTOR SHALL INSTALL VALVES, TAPPING SLEEVES AND GATE WELL STRUCTURES IN STRICT COMPLIANCE WITH MEASUREMENTS PROVIDED ON SHEET 1(i.e. 2'-0" BETWEEN GATE WELL WALL & CENTERLINE OF OPERATING NUT) TO ALLOW PROPER OPERATION OF VALVE THROUGH GATEWELL OPENING. FAILURE TO DO SO WILL REQUIRE CONTRACTOR TO CORRECT AT HIS EXPENSE.
12. ALL CROSS-CONNECTION CONTROL DEVICES SHALL BE INSTALLED AS REQUIRED BY THE LOCAL PLUMBING INSPECTOR AND IN ACCORDANCE WITH THE STANDARDS OF THE OAKLAND COUNTY DRAIN COMMISSIONER OPERATION AND MAINTENANCE DIVISION AND THE MICHIGAN DEPARTMENT OF ENVIRONMENTAL QUALITY, DIVISION OF DRINKING WATER AND RADIOLOGICAL PROTECTION.
13. ALL WATER SERVICE CONNECTIONS TWO (2) INCHES AND SMALLER SHALL BE MADE BY THE OAKLAND COUNTY DRAIN COMMISSIONER, OPERATIONS AND MAINTENANCE DIVISION AFTER WATER MAIN ACCEPTANCE AND APPLICABLE TAP PERMITS ARE OBTAINED.
14. ALL FITTINGS AND BENDS SHOULD BE BLOCKED IN ACCORDANCE WITH THRUST BLOCK DETAILS, UNLESS ALTERNATE THRUST RESTRAINT SYSTEM, AS INDICATED IN PLANS AND SPECIFICATIONS, IS APPROVED BY OAKLAND COUNTY DRAIN COMMISSIONER AND THE LOCAL MUNICIPALITY.

# WATER MAIN MATERIALS NOTES

1. TEMPORARY CONNECTIONS, WHICH MAY BE MADE FOR CHLORINATING AND FLUSHING PURPOSES, SHALL INCLUDE A TESTABLE DOUBLE CHECK VALVE BACKFLOW PREVENTER WITH CURRENT CERTIFICATION.
2. CORPORATION STOPS USED FOR INSERTION INTO MAINS SHALL BE MUELLER TYPE H-15000. ALL STOPS SHALL HAVE BRONZE CAST BODIES, KEYS, STEM WASHERS AND NUTS. INLET THREADS SHALL CONFORM TO THE LATEST VERSION OF AWWA C800.
3. ALL DUCTILE IRON PIPE (D.I.P.) WATER MAINS SHALL BE DESIGNED FOR 150 PSI MINIMUM WORKING PRESSURE.
4. THE DUCTILE IRON PIPE TO BE FURNISHED AND DELIVERED UNDER THIS SPECIFICATION SHALL MEET ALL THE REQUIREMENTS OF THE CURRENT AWWA C151 (ANSI A21.5), EXCEPT AS OTHERWISE SPECIFIED HEREIN. PIPE SHALL BE DOUBLE CEMENT-LINED AND SEAL COATED WITH AN APPROVED BITUMINOUS SEAL COAT IN ACCORDANCE WITH AWWA C104 (ANSI A21.4).
5. DUCTILE IRON PIPE SHALL BE CLASS 54 FOR SIZES THREE (3) INCH THROUGH TWENTY (20) INCH. SIZE TWENTY-FOUR (24) INCH AND LARGER SHALL BE CLASS 55 DUCTILE IRON PIPE (ABBREVIATED "D.I." IN DETAILS AND ON THIS SHEET).
6. PIPES OF SIZES LARGER THAN TWENTY-FOUR (24) INCHES IN NOMINAL DIAMETER SHALL MEET ALL THE REQUIREMENTS OF THE CURRENT AWWA C100 FOR DUCTILE IRON WATER PIPE.
7. MECHANICAL AND SLIP-ON JOINTS FOR DUCTILE IRON WATER MAIN SHALL BE IN ACCORDANCE WITH AWWA C111 (ANSI A21.11).
8. FLANGE JOINTS FOR DUCTILE IRON WATER MAIN SHALL BE IN ACCORDANCE WITH AWWA C110 (ANSI A21.10).
9. FITTINGS FOR DUCTILE IRON PIPE SHALL BE DUCTILE IRON OR CAST IRON AND SHALL MEET REQUIREMENTS OF AWWA C110 (ANSI A21.10) OR AWWA C153 (ANSI A21.53). DUCTILE IRON FITTINGS SHALL BE RATED FOR 350 PSI, PIPE SIZES TWENTY-FOUR (24) INCH DIAMETER AND LESS AND 250 PSI FOR PIPE SIZES OVER TWENTY-FOUR (24) INCH DIAMETER. DUCTILE IRON FLANGE FITTINGS SHALL BE RATED FOR 250 PSI FOR ALL PIPE DIAMETERS.
10. ALL BURIED BOLTS, NUTS, AND WASHERS SHALL BE CORTEN OR EQUIVALENT AND POLY-WRAPPED.

# VALVE AND SLEEVE NOTES

1. GATE VALVES, SIZES THREE (3) INCH THROUGH SIXTEEN (16) INCH AND TAPPING VALVES SHALL BE LOCAL MUNICIPAL STANDARD AS DETAILED WITH NON-RISING STEM.
2. ALL IN LINE GATE VALVES THREE (3) INCH AND LARGER SHALL BE IN WELLS AS DETAILED. SPECIFICATIONS SHALL INCLUDE THE DIRECTION OF OPERATION OF ALL VALVES.
3. ALL GATE WELL COVERS SHALL BE LOCAL MUNICIPAL STANDARD AS DETAILED.
4. ALL GATE VALVES WITH OPERATING NUTS AT A DISTANCE GREATER THAN FIVE (5) FEET BELOW GROUND SURFACE SHALL BE PROVIDED WITH AN EXTENSION STEM. THE LENGTH OF THE EXTENSION STEM SHALL REACH WITHIN FIVE (5) FEET FROM THE GROUND SURFACE. WHEN AN EXTENSION STEM IS USED, IT SHALL BE HELD IN PLACE BY AN EXTENSION STEM GUIDE SUITABLY FASTENED TO THE WALL OF THE GATE WELL. THE EXTENSION STEM SHALL BE MECHANICALLY ATTACHED TO THE OPERATING NUT. DETAILS OF THE EXTENSION SYSTEM AND THE METHOD OF INSTALLATION SHALL BE APPROVED BY THE ENGINEER PRIOR TO INSTALLATION.
5. BUTTERFLY VALVES MAY BE USED FOR VALVES GREATER THAN 16-INCH DIAMETER AND SHALL BE MODEL 2F11 AS MANUFACTURED BY HENRY PRATT COMPANY OR APPROVED EQUAL.
6. TAPPING VALVES SHALL BE SERIES "A" AS MANUFACTURED BY EAST JORDAN IRON WORKS OR RESILIENT SEATED GATE VALVES AS APPROVED BY LOCAL MUNICIPALITY.
7. TAPPING SLEEVES SHALL BE MANUFACTURED BY ROMAC INDUSTRIES; MUELLER; EAST JORDAN; SMITH-BLAIR OR APPROVED EQUAL AND APPROVED BY OAKLAND COUNTY DRAIN COMMISSIONER.

# HYDRANT REQUIREMENTS

1. ALL HYDRANTS SHALL BE CONSTRUCTED WITH A SIX (6) INCH COMPANION GATE VALVE IN A THREE (3) PIECE, ADJUSTABLE DUCTILE IRON VALVE BOX, WHICH SHALL INCLUDE A FIVE AND ONE-QUARTER (5-1/4) INCH SCREW SHAFT. VALVE BOXES SHALL BE SERIES 6860 AS MANUFACTURED BY TYLER PIPE OR APPROVED EQUAL.
2. ALL HYDRANTS SHALL BE EAST JORDAN IRON WORKS NO. 5-BR- TRAFFIC MODEL, OR MUELLER SUPER CENTURIAN MODEL 250, OR APPROVED EQUAL. SELF-DRAINING HYDRANTS SHALL NOT BE USED. ALL HYDRANTS SHALL BE LOCAL MUNICIPAL STANDARD AS DETAILED. HYDRANTS SHALL HAVE BREAKAWAY FLANGE.
3. ALL HYDRANTS SHALL BE PAINTED RED ABOVE GROUND AND BLACK BELOW GROUND WITH A FINISH COAT OF GLAMORTEX 501 ENAMEL, COLOR 314 VERMILLION OR APPROVED EQUAL. HYDRANT CAP SHALL BE PAINTED SAME COLOR AS THE HYDRANT.
4. ALL FIRE HYDRANT JOINTS SHALL BE TOTALLY RESTRAINED BY THE USE OF MEG-A-LUGS OR OTHER RESTRAINED JOINT. THRUST BLOCKS ARE ALSO REQUIRED.

# ACCEPTANCE OF NEW WATER MAINS

1. PRIOR TO WATER MAIN ACCEPTANCE THE FOLLOWING CONDITIONS MUST BE MET: 1) PRESSURE TESTING AND BACTERIA TESTING MUST BE COMPLETED IN ACCORDANCE WITH THE OAKLAND COUNTY DRAIN COMMISSIONER 2) ALL EASEMENT AND RIGHT-OF-WAY ACQUISITION MUST BE ACCEPTED BY THE OAKLAND COUNTY DRAIN COMMISSIONER, RIGHT-OF-WAY DIVISION 3) THE LOCAL MUNICIPALITY MUST BE PROVIDED WITH THE BILL OF SALE AND 4) ALL MYLAR "RECORD DRAWINGS" MUST BE ACCEPTED AND APPROVED BY THE OAKLAND COUNTY DRAIN COMMISSIONER, OPERATIONS AND MAINTENANCE DIVISION. THE OAKLAND COUNTY DRAIN COMMISSIONER AND LOCAL ENGINEER MUST WITNESS THE CONNECTION OF THE WATER MAIN TO THE EXISTING WATER MAIN, AFTER WHICH RESIDENTIAL AND COMMERCIAL TAPS WILL BE ALLOWED.
2. THE CONTRACTOR SHALL NOTIFY THE OAKLAND COUNTY DRAIN COMMISSIONER, OPERATIONS AND MAINTENANCE DIVISION THROUGH THE LOCAL ENGINEER FOR PRESSURE TESTING, BACTERIOLOGICAL SAMPLING, CONNECTIONS TO EXISTING WATER MAIN AND FINAL FIELD REVIEW. A SEVENTY-TWO (72) HOUR ADVANCE NOTICE IS REQUIRED.
3. THE CONTRACTOR SHALL DISINFECT AND PRESSURE TEST ALL NEW WATER MAIN CONSTRUCTION PURSUANT TO THE CURRENT STANDARDS SPECIFIED BY THE OAKLAND COUNTY DRAIN COMMISSIONER. THE WATER MAIN SHALL PASS A TEST OF 150 PSI FOR A TWO (2) HOUR PERIOD. WATER LOSS SHALL NOT EXCEED A RATE OF 11.65 U.S. GALLONS PER INCH DIAMETER PER MILE OF WATERLINE IN TWENTY-FOUR (24) HOURS.
4. WHERE CONTRACTOR SUPPLIED GAUGES ARE REQUIRED, MINIMUM SIZE SHALL BE 3½" DIAMETER OR LARGER GRADUATED IN ONE (1) OR TWO (2) POUND INCREMENTS FROM 1 TO 160 P.S.I. OR HIGHER.
5. PRESSURE TESTING AND BACTERIA TESTING MUST BE COMPLETED PRIOR TO CONNECTING TO THE EXISTING WATER MAIN.

# OAKLAND COUNTY DRAIN COMMISSIONER WATER SYSTEM STANDARDS - GATE VALVES

| COMMUNITY | DIRECTION TO OPEN | VALVE TYPE STD. GATE VALVE | VALVE TYPE TAPPING VALVE |
|---|---|---|---|
| BINGHAM FARMS | RIGHT | C500 | C500 |
| BLOOMFIELD HILLS | RIGHT | C500 | C500 |
| COMMERCE TOWNSHIP | RIGHT | C500 or C515 | C500 or C515 |
| FARMINGTON HILLS | RIGHT | C500 | C500 |
| HIGHLAND TOWNSHIP | LEFT | C500 OR C515 | C500 OR C515 |
| KEEGO HARBOR | RIGHT | C500 | C500 |
| LYON TOWNSHIP | LEFT | C500 or C515 | C500 OR C515 |
| OAKLAND TOWNSHIP | LEFT | C500 or C515 | C500 or C515 |
| ORCHARD LAKE VILLAGE | LEFT | C500 | C500 |
| OXFORD TOWNSHIP | LEFT | C500 OR C515 | C500 OR C515 |
| ROYAL OAK TOWNSHIP | RIGHT | C500 | C500 |
| SPRINGFIELD TOWNSHIP | LEFT | C500 | C500 |

1.) C500 GATE VALVE – MANUFACTURED BY EAST JORDAN IRON WORKS OR APPROVED EQUAL.

2.) C509 RESILIENT SEATED GATE VALVE – MANUFACTURED BY U.S. PIPE, MUELLER, EAST JORDAN IRON WORKS, AMERICAN FLOW CONTROL OR APPROVED EQUAL.

# FIRE HYDRANT NOZZLE SIZE AND THREAD SPECIFICATIONS

| LOCATION | PUMPER NOZZLE | HOSE NOZZLE | OPERATING NUT | STYLE |
|---|---|---|---|---|
| BINGHAM FARMS | (1) – 3-3/4" – D.F.D. | (2) – 2-1/2" – D.F.D. | 1-1/8" | 5 BR |
| BLOOMFIELD HILLS | (1) – 3-3/4" – D.F.D. | (2) – 2-1/2" – D.F.D. | 1-1/8" | 5 BR |
| COMMERCE TOWNSHIP | (1) – 5" STORZ | (2) – 2-1/2" – N.S.T. | 1-1/2" | 5 BR |
| FARMINGTON HILLS | (1) – 3-3/4" – D.F.D. | (2) – 2-1/2" – N.S.T. | 1-1/8" | 5 BR |
| HIGHLAND TOWNSHIP | (1) – 5" STORZ | (2) – 2-1/2" – N.S.T. | 1-1/2" | 5 BR |
| KEEGO HARBOR | (1) – 3-3/4" – D.F.D. | (2) – 2-1/2" – D.F.D. | 1-1/8" | 5 BR |
| LYON TOWNSHIP | (1) – 5" – STORZ | (2) – 2-1/2" – N.S.T. | 1-1/2" | 5 BR |
| OAKLAND TOWNSHIP | (1) – 3-3/4" – D.F.D. | (2) – 2-1/2" – D.F.D. | 1-1/2" | 5 BR |
| ORCHARD LAKE VILLAGE | (1) – 3-3/4" – D.F.D. | (2) – 2-1/2" – D.F.D. | 1-1/8" | 5 BR |
| OXFORD TOWNSHIP | (1) – 5" STORZ | (2) – 2-1/2" – N.S.T. | 1-1/2" | 5 BR |
| ROYAL OAK TOWNSHIP | (1) – 3-3/4" – D.F.D. | (2) – 2-1/2" – D.F.D. | 1-1/8" | 5 BR |
| SPRINGFIELD TOWNSHIP | (1) – 4-1/2" – N.S.T. | (2) – 2-1/2" – N.S.T. | 1-1/2" | 5 BR |

1. D.F.D. – DETROIT FIRE DEPARTMENT THREAD
2. N.S.T. – NATIONAL STANDARD THREAD
3. STORZ NOZZLES SHALL BE COMPATIBLE WITH STORZ COUPLED LARGE DIAMETER FIRE HOSE. NOZZLES SHOULD BE MADE OF "LEAD FREE" BRASS OR ALUMINUM, AS APPROVED BY LOCAL CITY, VILLAGE OR TOWNSHIP. THE NOZZLE SHALL BE AN INTEGRAL PART OF THE HYDRANT, RESISTANT TO TAMPER AND REMOVAL. ENGAGEMENT LUGS SHALL BE ON THE NOZZLE AND CAP TO PREVENT FAILURE UNDER HIGH PRESSURE. NOZZLE AND CAP SHALL MEET AWWA C502 SPECIFICATIONS. NOZZLE SHALL BE COMPATIBLE WITH HOSE LOCK TO PREVENT HOSE FROM DISCONNECTING WHILE IN USE.

UNLESS OTHERWISE SPECIFIED, MINIMUM CASING PIPE SHALL BE ASTM A-139 GRADE B, WALL THICKNESS AS FOLLOWS:

| NOMINAL SIZE | MINIMUM WALL THICKNESS |
|---|---|
| 8"– 42" | 0.375 |
| 48"– 60" | 0.500 |

REQUIRED QUANTITY OF RUNNERS IN ACCORDANCE WITH SIZE

| | |
|---|---|
| TO 14" DIA. | 4 RUNNERS |
| 16" TO 36" DIA | 6 RUNNERS |
| 38" TO 48" DIA. | 8 RUNNERS |

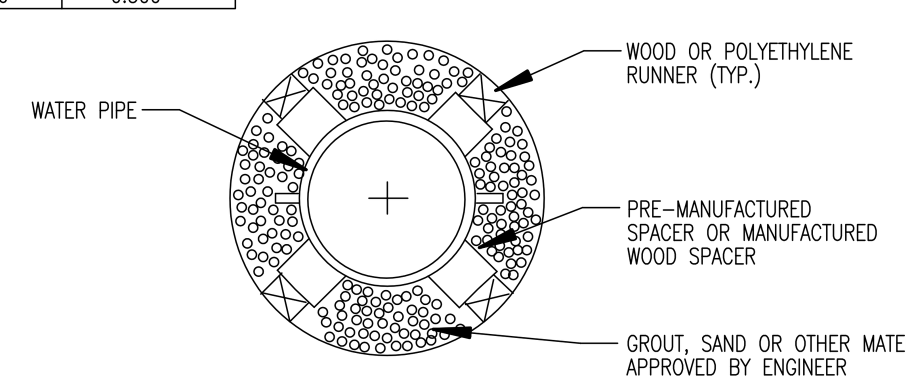


## SUPPORT FOR WATER MAIN CONSTRUCTED IN CASING PIPE

SCALE 1"= 4'

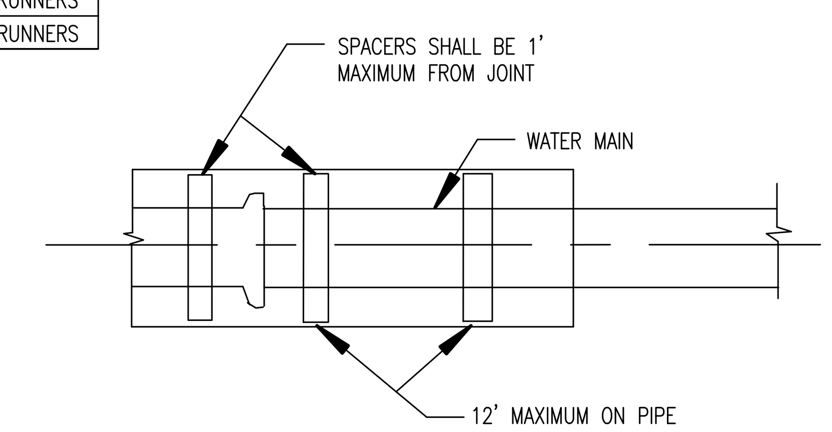


## WATER MAIN IN CASING SECTION

SCALE 1"= 2'

## WATER MAIN IN CASING DETAILS

# OAKLAND COUNTY DRAIN COMMISSIONER OPERATIONS AND MAINTENANCE DIVISION WATER SYSTEMS RECORD DRAWING SPECIFICATIONS

IN AREAS WHERE WATER SYSTEMS ARE OPERATED AND MAINTAINED BY THE OAKLAND COUNTY DRAIN COMMISSIONER, OPERATIONS AND MAINTENANCE DIVISION, FINAL ACCEPTANCE OF THE WATER SYSTEM MUST BE RENDERED BY THE OAKLAND COUNTY DRAIN COMMISSIONER, OPERATIONS AND MAINTENANCE DIVISION, BEFORE THE SYSTEM CAN BE USED FOR THE SERVICE INTENDED.

ONE ITEM REQUIRED FOR FINAL ACCEPTANCE SHALL BE THE SUBMISSION OF RECORD DRAWINGS TO THE OAKLAND COUNTY DRAIN COMMISSIONER, OPERATIONS AND MAINTENANCE DIVISION, BY THE DESIGN ENGINEER. RECORD DRAWINGS SHALL BE DEFINED AS AND CONTAIN THE FOLLOWING INFORMATION:

1. THE DESIGN ENGINEER SHALL FURNISH "RECORD DRAWINGS" WATER MAIN PLANS UPON JOB COMPLETION. "RECORD DRAWINGS" SHALL BE FORWARDED TO THE OAKLAND COUNTY DRAIN COMMISSIONER BY THE LOCAL MUNICIPAL ENGINEER AFTER THEIR REVIEW AND APPROVAL.
2. RECORD DRAWINGS SHALL BE PROVIDED ON THREE (3) MIL. MYLAR. XEROX OR ANY HEAT PROCESS REPRODUCTIONS WILL NOT BE ACCEPTED.
3. ALONG WITH THE MYLAR PLAN SET, PROVIDE TWO (2) SETS OF BLUEPRINTS, PRODUCED FROM THE MYLARS AND THE PLANS ON ELECTRONIC MEDIA IN AUTOCAD FORMAT (LATEST VERSION).
4. EACH AND EVERY SHEET SHALL BE SEALED BY THE PROJECT DESIGN ENGINEER, ALONG WITH THE FOLLOWING CERTIFICATION STATEMENT ON THE COVER SHEET:

> I HEREBY CERTIFY THAT OUR FIRM HAS PREPARED THESE RECORD DRAWINGS OF THE IMPROVEMENTS AS CONSTRUCTED, AND THAT TO THE BEST OF MY KNOWLEDGE THOSE IMPROVEMENTS NOTED AS "RECORD DRAWINGS" WERE CONSTRUCTED IN SUBSTANTIAL CONFORMANCE WITH THE APPROVED CONSTRUCTION PLANS; AND ALSO THAT THE WATER MAIN AND STRUCTURES, AS CONSTRUCTED, LIE WITHIN THE EASEMENT DESCRIPTIONS REQUIRED BY THE OAKLAND COUNTY DRAIN COMMISSIONER'S OFFICE.
>
> ______________________________
> (COMPANY NAME)
>
> ______________________________
> (ENGINEER'S SIGNATURE)
>
> PROFESSIONAL ENGINEER NO. ______________
>
> ENGINEER SEAL

5. THE MINIMUM SCALE SHALL BE ONE (1) INCH EQUALS ONE HUNDRED (100) FEET.
6. THE SIZE, LENGTH, CLASS AND MANUFACTURER OF PIPE INSTALLED SHALL BE INDICATED.
7. THE SIZE, BRAND AND MODEL NUMBERS OF ALL VALVES AND HYDRANTS INSTALLED SHALL BE INDICATED.
8. A TOTAL RECORD DRAWING QUANTITY LIST SHALL BE INCLUDED, AS WELL AS A RECORD DRAWING QUANTITY LIST ON EACH INDIVIDUAL SHEET.
9. THE LOCATIONS SHALL BE SHOWN ON THE PLANS WITH AN ACCURACY OF ONE (1) FOOT.
10. THE OFFSET OF THE WATER MAIN FROM PROPERTY LINES SHALL BE INDICATED.
11. ALL GATE VALVE WELLS, HYDRANTS AND ALL WATER SYSTEM APPURTENANCES SHALL BE LOCATED FROM THE NEAREST PROPERTY CORNER.
12. ALL UNDERGROUND APPURTENANCES, SUCH AS GATE VALVE WELLS, METER PITS, PRESSURE REDUCING VALVE PITS, ETC. SHALL BE LOCATED FROM THE NEAREST HYDRANT THAT IS CONNECTED TO THE SAME WATER MAIN AS THE APPURTENANCE.
13. THE LOCATION, SIZE, BRAND AND MODEL NUMBER OF EVERY RESTRAINED JOINT SHALL BE NOTED.
14. THE ACCURATE LOCATION OF ALL UTILITY CROSSINGS WHERE THE RECOMMENDED SEPARATION, VERTICALLY OR HORIZONTALLY, IS LESS THAN THE TEN STATE STANDARDS SHALL BE NOTED.

Plotfile Name: GISQtrs.ctb
File Location: J:\Drain\MappingUnit\STANDARD\DETAILS\ApprovedStandard\Water\Std-Wtr3.dwg

**WATER MAIN**
**STANDARD DETAILS**

REVISION BLOCK

Data Source / Source Date: N/A

| Rev. No.: | Rev. By: | Rev. Date: | Description: |
|---|---|---|---|
| 1 | LJC | 12/03/01 | HYDRANT CHART UPDATE PER LYON TOWNSHIP |
| 2 | RRH | 06/05/02 | NOTE AND DETAIL UPDATES |
| 3 | RRH | 08/03/02 | NOTE AND DETAIL UPDATES |
| 4 | DS | 10/12/06 | NOTE UPDATES PER REVIEW |

ORIG. DATE: 01/01/01
SCALE: NONE
DESIGNED BY: OCDC
DRAWN BY: OCDC Mapping

OAKLAND COUNTY DRAIN COMMISSIONER
John P. McCulloch
ONE PUBLIC WORKS DRIVE, BLDG 95 WEST
WATERFORD, MICHIGAN
48328-1907

SHEET NO.: 3 of 3