PRIVATE ROAD SECTIONS

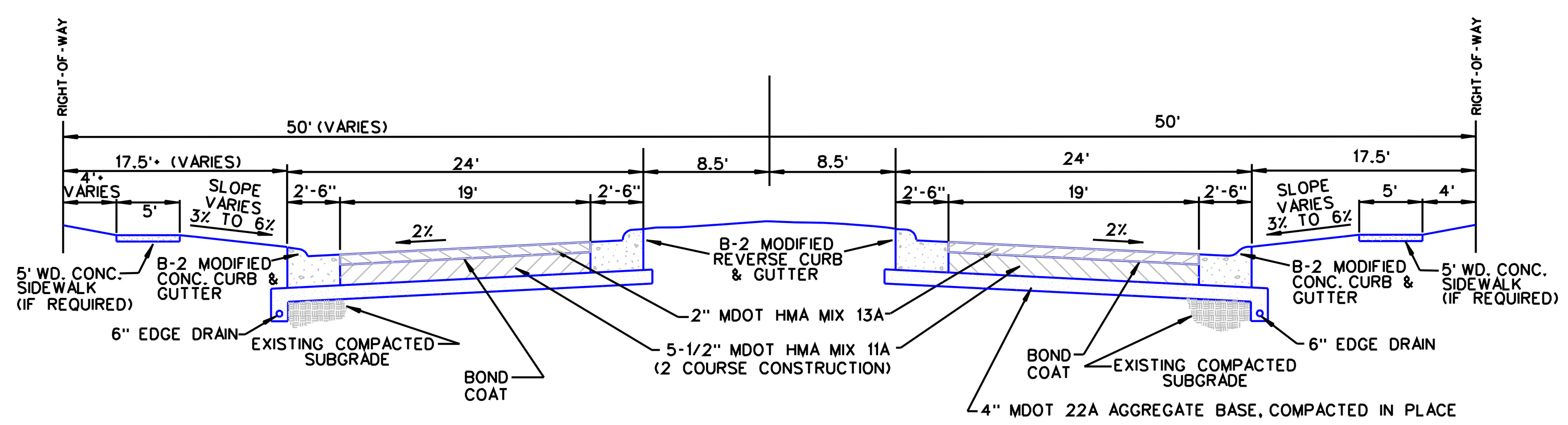

NOTES:
1. COMPACT HMA TO 97% MARSHAL METHOD.
2. COMPACT 12" BASE AND SUBGRADE TO AT LEAST 95% MAXIMUM DRY DENSITY IN ACCORDANCE WITH ASTM D1557 (MODIFIED PROCTOR).

BOULEVARD
NOT TO SCALE

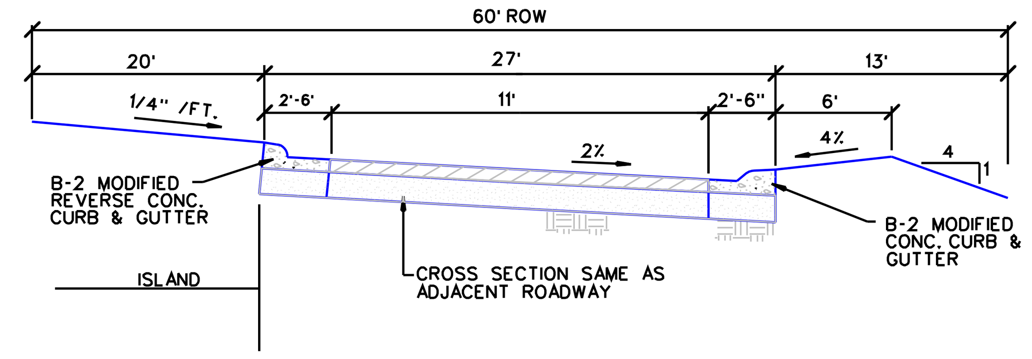

RESIDENTIAL CUL DE SAC
NOT TO SCALE

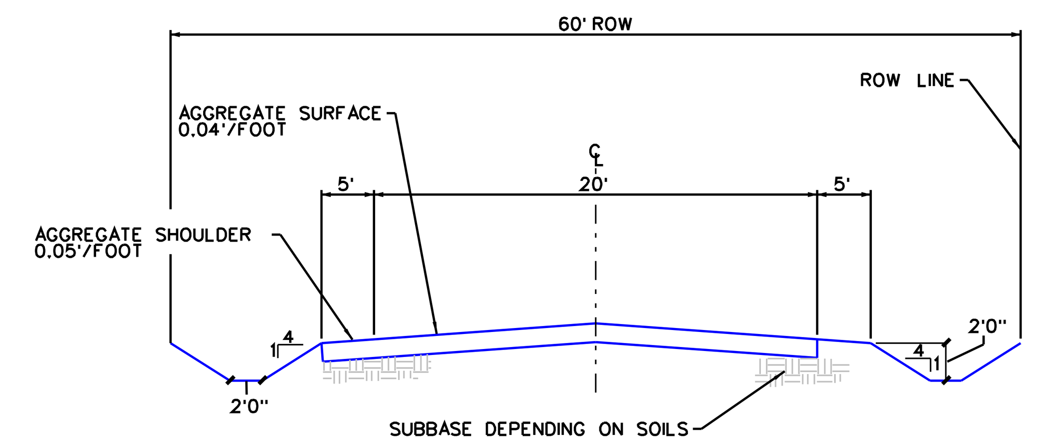

TYPE OF NATIVE SOILS	MDOT CLASS II SUBBASE	MDOT 22A AGGREGATE SURFACING
SAND	----	8"
CLAY	8"	8"
SILT	12"	8"

GRAVEL ROAD
NOT TO SCALE

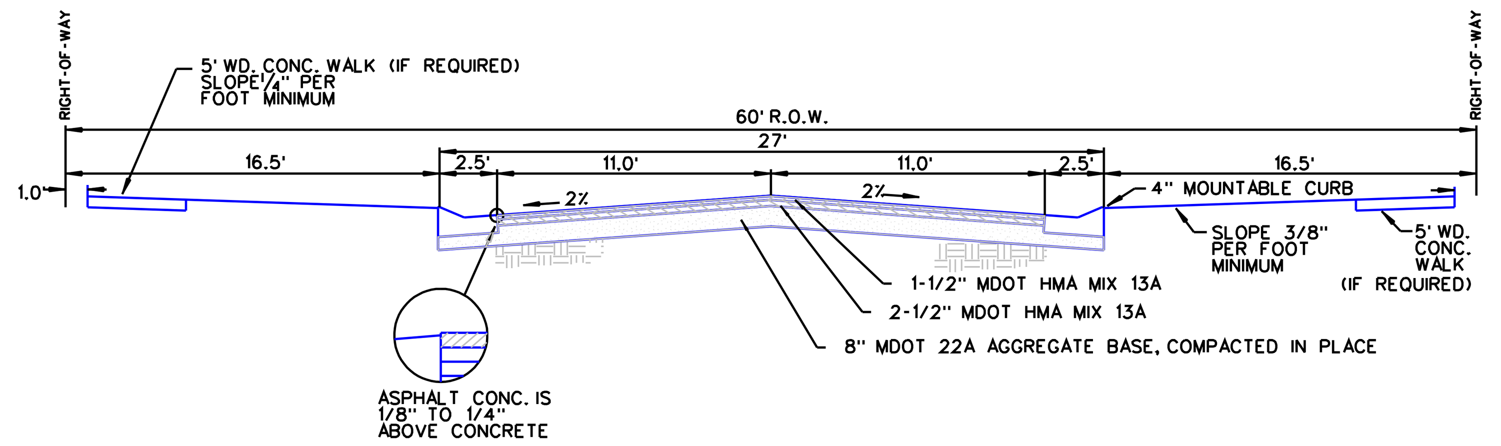

NOTES:
1. COMPACT HMA TO 97% MARSHAL METHOD.
2. COMPACT 12" BASE AND SUBGRADE TO AT LEAST 95% MAXIMUM DRY DENSITY IN ACCORDANCE WITH ASTM D1557 (MODIFIED PROCTOR).

HMA STREET SECTION
NOT TO SCALE

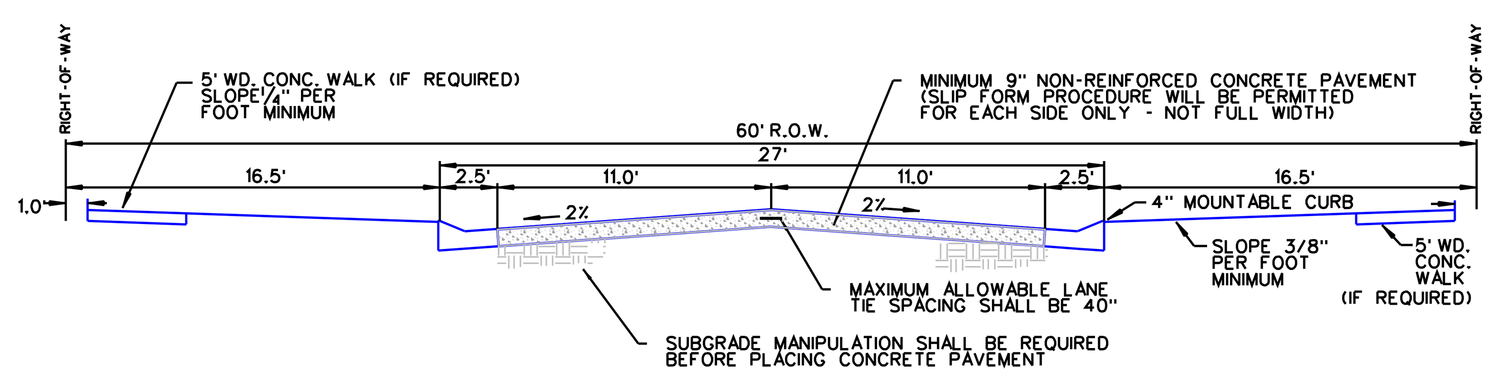

CONCRETE STREET
NOT TO SCALE

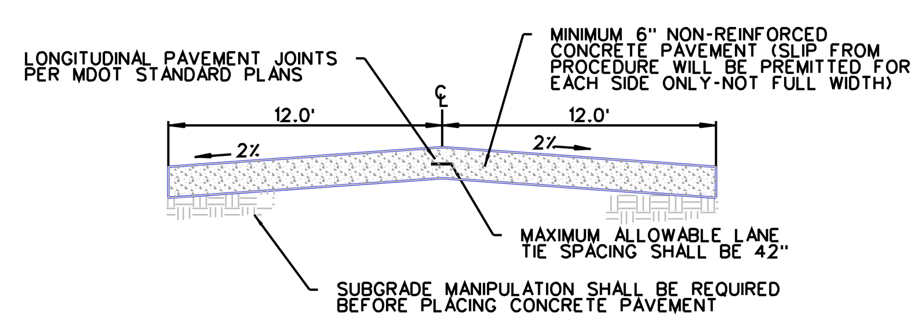

CONCRETE SERVICE DRIVE
NOT TO SCALE

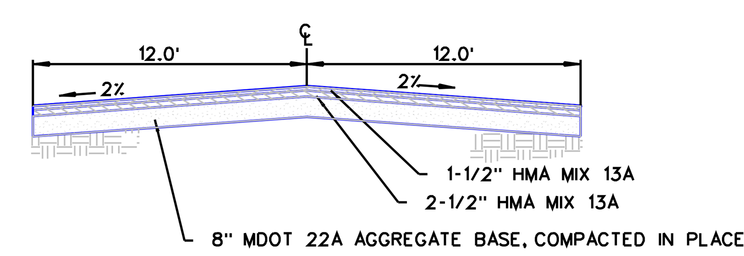

NOTES:
1. COMPACT HMA TO 97% MARSHALL METHOD
2. COMPACT 12" BASE AND SUBGRADE TO AT LEAST 95% MAXIMUM DRY DENSITY IN ACCORDANCE WITH ASTM D1557 (MODIFIED PROCTOR).

HMA SERVICE DRIVE
NOT TO SCALE

PARKING LOT CROSS SECTIONS

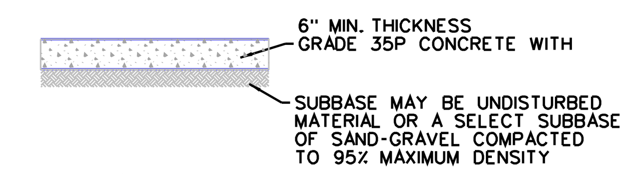

CLASS A CONCRETE
NOT TO SCALE

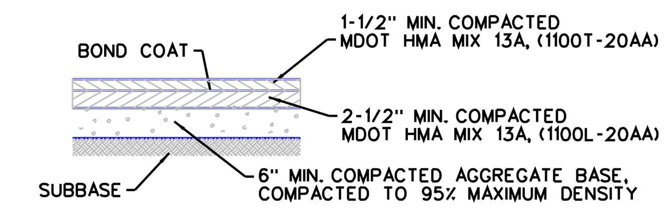

CLASS A HMA
NOT TO SCALE

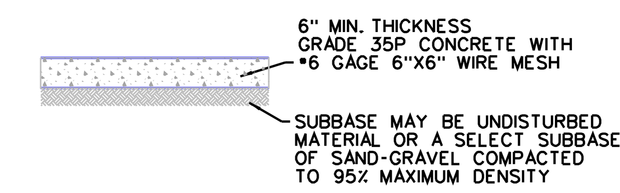

CLASS B CONCRETE
NOT TO SCALE

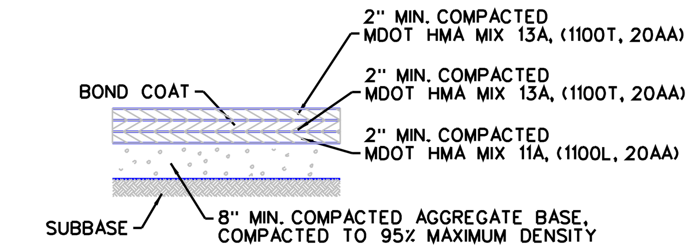

NOTES:
1. 4" MDOT HMA MIX 13A (TWO LIFTS) ON 12" COMPACTED AGGREGATE BASE WILL ALSO BE ACCEPTED.

CLASS B HMA
NOT TO SCALE

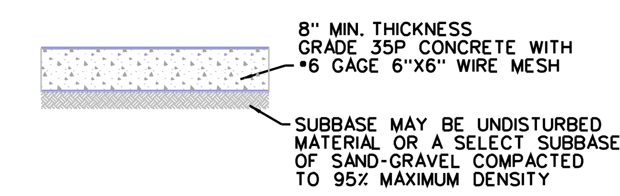

CLASS C CONCRETE
NOT TO SCALE

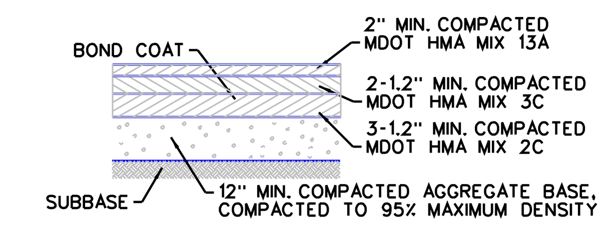

CLASS C HMA
NOT TO SCALE

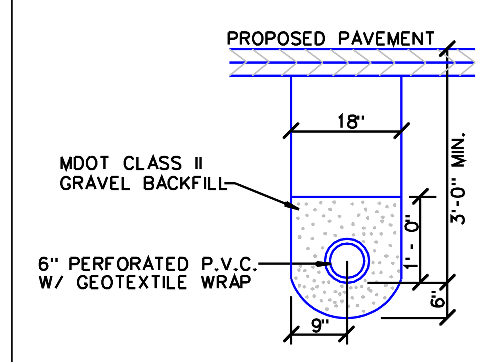

UNDERDRAIN DETAIL
NOT TO SCALE

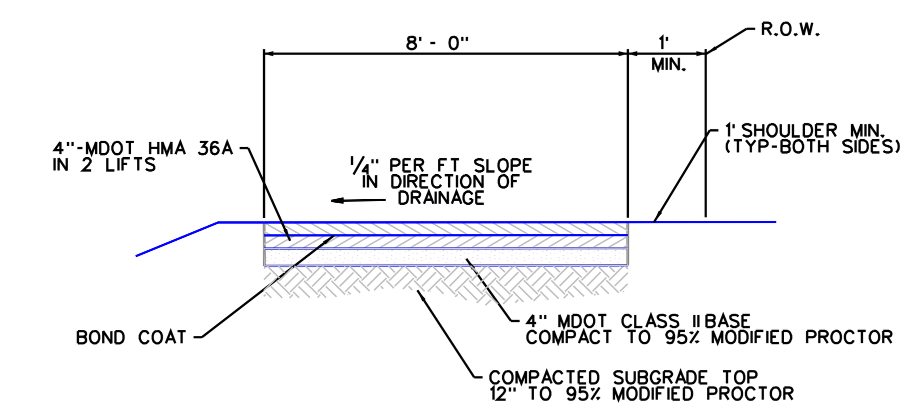

NOTES:
1. PRAMITOL "C' SOIL STERMILANT SHALL BE APPLIED TO THE SUBGRADE PRIOR TO HMA PLACEMENT.
2. COMPACT HMA 36A TO 97% MARSHALL METHOD.
3. COMPACT 12" BASE AND SUBGRADE TO AT LEAST 95% MAXIMUM DRY DENSITY IN ACCORDANCE WITH ASTM D1557 (MODIFIED PROCTOR).
4. PROVIDE AT LEAST 3' CLEARANCE FROM EDGE OF PATH TO DITCH BACKS, STANDING OBJECTS, DROP OFFS, WATER, ETC.

SAFETY PATH
NOT TO SCALE

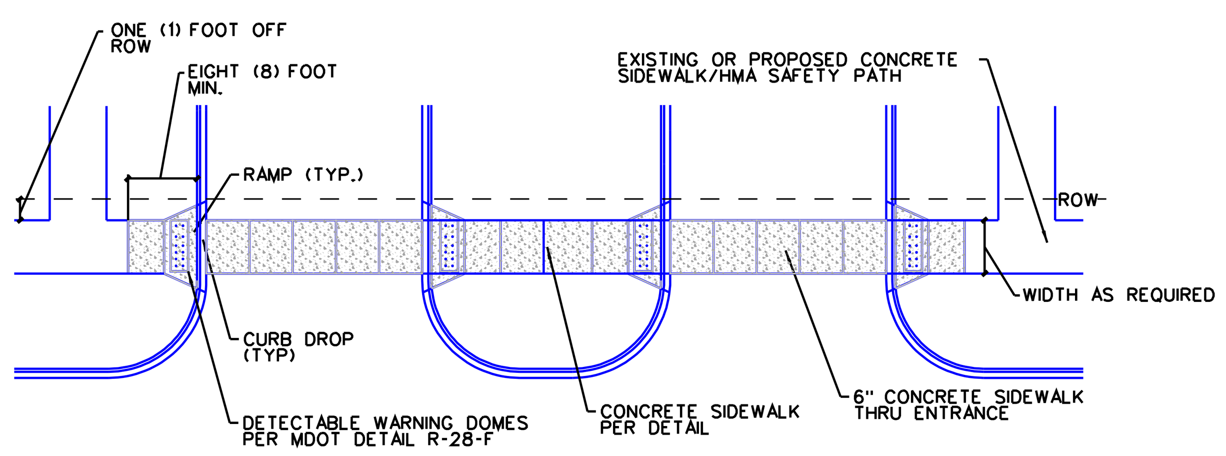

SIDEWALK AT BOULEVARD ENTRANCE
NOT TO SCALE

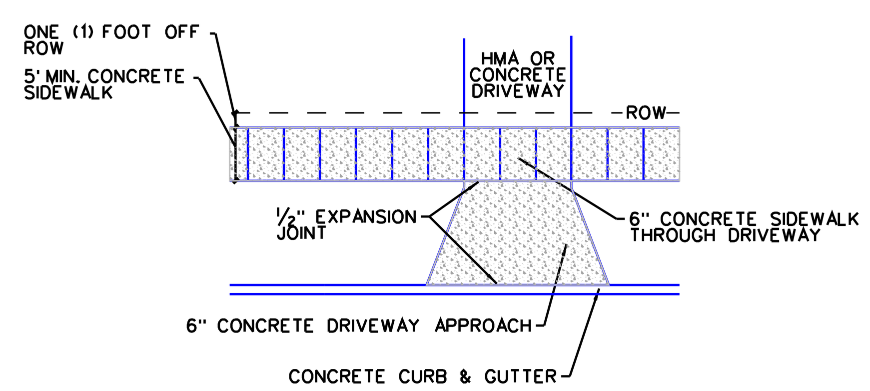

SIDEWALK AT RESIDENTIAL DRIVEWAY
NOT TO SCALE

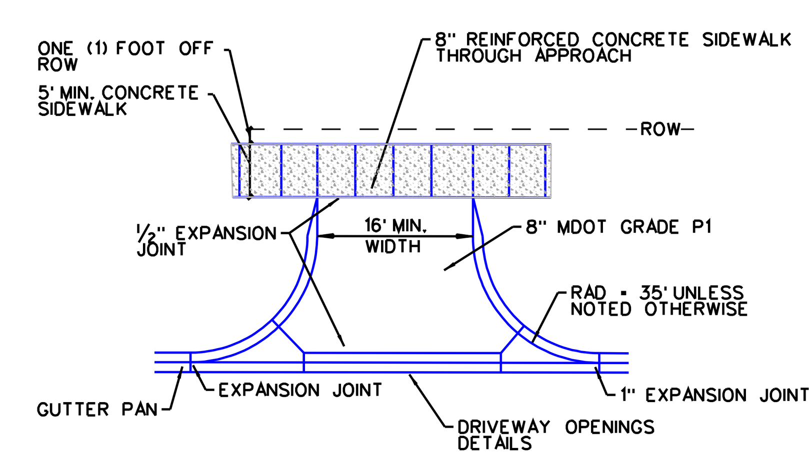

COMMERICAL OR INDUSTRIAL APPROACH
NOT TO SCALE

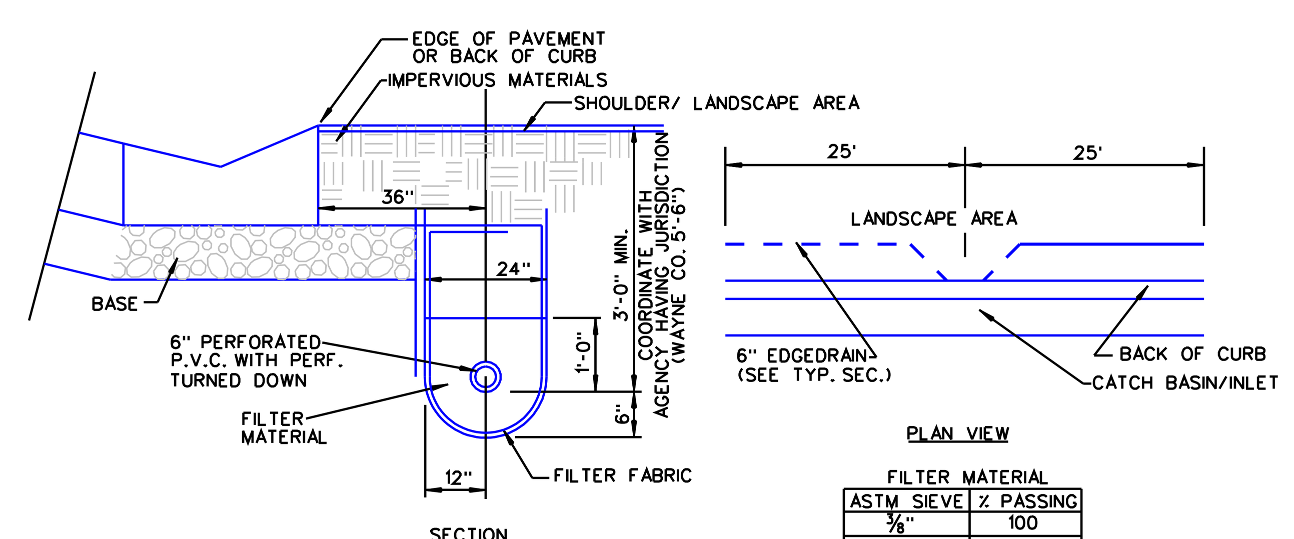

FILTER MATERIAL

ASTM SIEVE	% PASSING
3/8"	100
NO. 4	95-100
NO. 16	45-50
NO. 50	10-30
NO. 100	2-10

EDGEDRAIN DETAIL
NOT TO SCALE

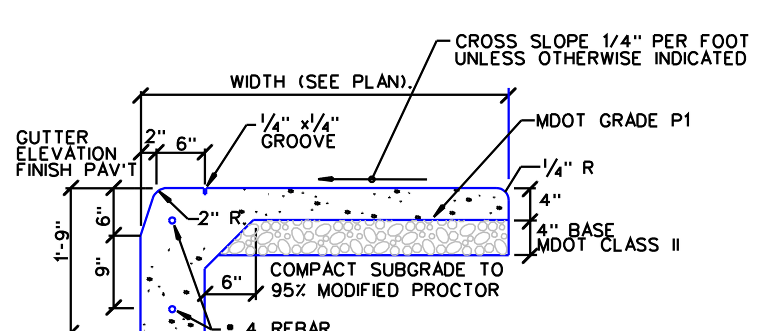

NOTES:
1. EXPANSION JOINTS: 1/2" WIDE, FULL DEPTH, AT 50' INTERVALS TRANSVERSELY, AROUND EMBEDDED ITEMS SUCH AS LIGHT BASES, AND AT ABUTTING STRUCTURES SUCH AS BUILDINGS OR CURBS.
2. CONTRACTION JOINTS: 1/4" WIDE, 1" DEEP, ARRANGE TO FORM PANELS 6' MAX. IN EITHER DIRECTION.

INTEGRAL CURB & WALK
NOT TO SCALE

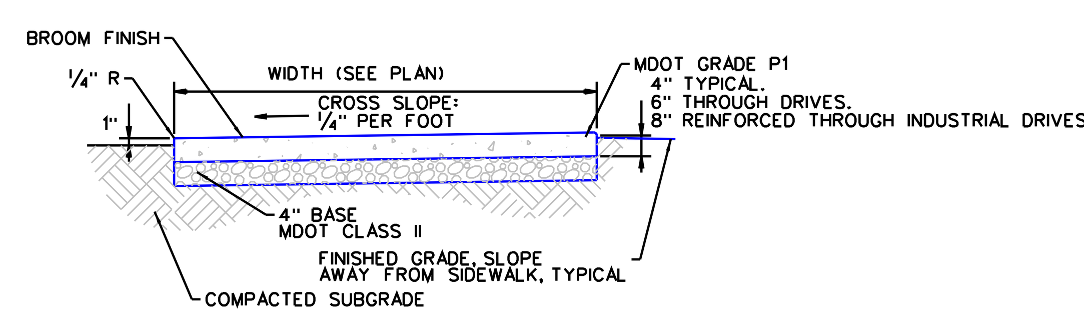

NOTES:
1. EXPANSION JOINTS: 1/2" WIDE, FULL DEPTH, AT 50' INTERVALS TRANSVERSELY, AROUND EMBEDDED ITEMS SUCH AS LIGHT BASES, AND AT ABUTTING STRUCTURES SUCH AS BUILDINGS OR CURBS.
2. CONTRACTION JOINTS: 1/4" WIDE, 1" DEEP, ARRANGE TO FORM PANELS 6' MAX. IN EITHER DIRECTION.
2. CONTRACTION JOINTS: 1/4" WIDE, 1" DEEP, ARRANGE TO FORM PANELS 6' MAX. IN EITHER DIRECTION.

CONCRETE SIDEWALK
NOT TO SCALE

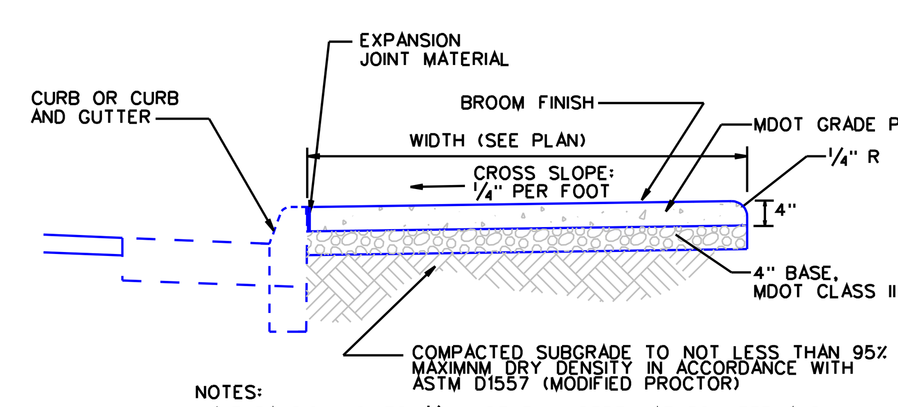

NOTES:
1. EXPANSION JOINTS: 1/2" WIDE, FULL DEPTH, AT 50' INTERVALS TRANSVERSELY, AROUND EMBEDDED ITEMS SUCH AS LIGHT BASES, AND AT ABUTTING STRUCTURES SUCH AS BUILDINGS OR CURBS.
2. CONTRACTION JOINTS: 1/4" WIDE, 1" DEEP, ARRANGE TO FORM PANELS 6' MAX. IN EITHER DIRECTION.

SIDEWALK AT EXISTING CURB
NOT TO SCALE

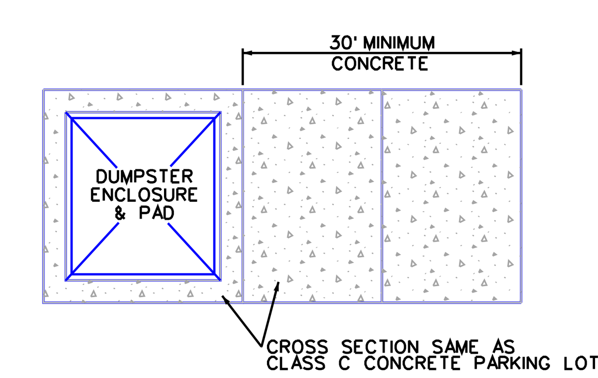

DUMPSTER PAD
NOT TO SCALE

GENERAL NOTES

1. THE HMA BOND COAT SHALL BE SS-1h 0.05-0.10 GAL/SYD.
2. THE SAFETY PATH THRU BOULAVARD ISLANDS SHALL BE CONCRETE.
3. SAFETY PATH RAMPS SHALL BE CONSTRUCTED OF CONCRETE AND SHALL EXTEND A MINIMUM OF FOUR (4) FEET PAST THE RAMP.
4. HMA DRIVEWAYS ARE TO BE 3" MDOT MIX 36A (TWO 1.5" LIFTS) WITH 8" MDOT 21AA BASE.
5. 1100 SERIES (MDOT 1990 STANDARDS) MAY BE SUBSTITUTED IF SOILS CONSULTANT RECOMMENDATION IS PROVIDED.
6. SIDEWALK RAMPS ARE TO BE CONSTRUCTED PER MDOT & ADA REQUIREMENTS.
7. PROPER DRAINAGE AND SUBDRAINAGE SHALL BE PROVIDED FOR ALL PAVEMENT.
8. PROPER METHODS SHALL BE USED WHEN SAWCUTTING EXISTING PAVEMENT.

REVISION:

DATE:

Terms and Conditions for Electronic Data:
This document is provided in electronic format for the referenced project. It is understood and agreed that any use or reuse of original or altered files willbe at the user's own risk and legalresponsibility. It is also agreed that the electronic files provided by Giffels-Webster Engineers, Inc. (GWE) are being provided for generalinformation purposes only. Neither the electronic files nor any CAD versions are to be relied on for construction layout purposes. The user expressly indemnifies and holds GWE harmless for any and allclaims, suits, liability, demands or other costs arising out of or resulting from the unauthorized use of these materials. GWE makes no representation as to the accuracy of the information provided by the electronic media. Data on electronic media can deteriorate or be modified without the knowledge of GWE. Electronic media viruses are increasing in complexity and growth. GWE advises allusers to scan any disc received from outside sources with a current antivirus program. It is understood and agreed that GWE willnot be responsible for any damage caused by such a virus. If any virus is detected by your system on any media received from GWE it is your responsibility to contact us immediately.

72 HOURS
(3 WORKING DAYS)
BEFORE YOU DIG
CALL MISS DIG
800-482-7171
(TOLL FREE)

PRINCIPAL:	K.M.
PROJ. MNGR:	J.S.
DESIGN:	D.N.
DRAWN:	D.N.
IND. REVIEW:	S.R.

PROFESSIONAL SEAL

DEVELOPED FOR:

THE CHARTER TOWNSHIP OF OXFORD
300 DUNLAP ROAD
OXFORD
MI, 48371
(248) 628-9787

Giffels-Webster Engineers, Inc.
ENGINEERS-LAND SURVEYORS
PLANNERS-LANDSCAPE ARCHITECTS
2871 BOND STREET
ROCHESTER HILLS, MI 48309
PHONE (248) 852-3100
FAX (248) 852-6372
407 E. FORT STREET, SUITE 600
DETROIT, MI 48226
PHONE (313) 962-4442
FAX (313) 962-5068
6303 26 MILE ROAD, SUITE 100
WASHINGTON, MI 48094
PHONE (586) 781-8950
FAX (586) 781-8951
EMAIL info@giffelswebster.com
www.giffelswebster.com

SHEET TITLE:

PAVEMENT

STANDARD DETAIL SHEET

OXFORD TOWNSHIP, OAKLAND COUNTY, MI.

DATE:	01/01/08
SCALE:	NO SCALE
SHEET:	1 OF 1
JOB:	17356.01

Copyright © 2007 Giffels-Webster Engineers, Inc. No reproduction shall be made without the prior written consent of Giffels-Webster Engineers, Inc.