ZONING ORDINANCE

Charter Township of Oxford, Oakland County, Michigan

Adopted: March 14, 2007

Effective: March 29, 2007

(With Amendments through January 6, 2015)

Township Board

William Dunn, Supervisor
Curtis W. Wright, Clerk
Joseph G. Ferrari, Treasurer
Susan Bellairs
Jack Curtis
Melvin Cryderman
Patti Durr

Planning Commission

Todd Bell, Chair
Thomas Berger, Vice Chair
Ed Hunwick, Secretary
Michael Young
Jack Curtis
Kallie Roesner
Michael Spisz

Township Staff

Deanna Cushing, Deputy Supervisor

TABLE OF CONTENTS

Article/Section		Page No.
Title Page		i
Table of Contents		ii
Article 1	**Title, Purpose, Enabling Authority and Conditions of Enactment**	**1-1**
Section 1.1	Title	1-1
Section 1.2	Purpose	1-1
Section 1.3	Enabling Authority	1-2
Section 1.4	Scope and Construction of Regulations	1-2
Section 1.5	Relationship to Other Ordinances, Regulations and Agreements	1-2
Section 1.6	Vested Right	1-2
Section 1.7	Validity and Severability	1-3
Section 1.8	Repealer	1-3
Section 1.9	Effective Date	1-3
Section 1.10	Adoption	1-3
Article 2	**Rules of Construction and Definitions**	**2-1**
Section 2.1	Rules Applying to Text	2-1
Section 2.2	Definitions	2-2
Article 3	**Zoning District Regulations**	**3-1**
Section 3.1	Establishment of Zoning Districts	3-1
Section 3.2	Official Zoning Map	3-1
Section 3.3	Application of Zoning District Regulations	3-2
Section 3.4	Intent of Districts	3-4
Section 3.5	Schedule of Use Regulations	3-7
Section 3.6	Determination of Similar Uses	3-27
Section 3.7	Schedule of District Regulations	3-28
Section 3.8	Additional Regulations	3-31
Article 4	**Special Land Uses**	**4-1**
Section 4.1	Intent	4-1
Section 4.2	Authority	4-1
Section 4.3	Application	4-1
Section 4.4	Procedures	4-1
Section 4.5	Findings of Fact	4-2
Section 4.6	Conditions and Safeguards	4-3
Section 4.7	Duration of Approval	4-4

Section 4.8 Reapplication 4-4
Section 4.9 Appeals 4-4

Article 5 Use Regulations 5-1

Section 5.1 Adult Regulated Uses 5-1
Section 5.2 Agribusiness 5-5
Section 5.3 Automobile Service Stations, Convenience Marts, and Repair Establishments 5-5
Section 5.4 Automobile Washes 5-7
Section 5.5 Bed and Breakfast Establishments 5-8
Section 5.6 Campgrounds, Recreational Vehicle Parks 5-9
Section 5.7 Caretaker's Quarters 5-11
Section 5.8 Cement and Asphalt Mixing Plants 5-12
Section 5.9 Cemeteries 5-13
Section 5.10 Churches, Houses of Worship 5-13
Section 5.11 Commercial Indoor Recreation 5-14
Section 5.12 Commercial Outdoor Recreation 5-14
Section 5.13 Community Building or Lodge Hall 5-16
Section 5.14 Convalescent or Nursing Home 5-16
Section 5.15 Day Care Facilities, State Licensed 5-16
Section 5.16 Foster Care Facilities, State Licensed 5-18
Section 5.17 Golf Courses, Country Clubs, and Swim Clubs 5-19
Section 5.18 Heavy Vehicle and Equipment Repair Establishment 5-20
Section 5.19 Horse Riding Stables and Sales Barns 5-22
Section 5.20 Hospitals 5-22
Section 5.21 Junk Yard, Auto Salvage, Wrecking Yard, and Recycling Operations 5-23
Section 5.22 Kennels 5-25
Section 5.23 Landfills, Dumping and Sewage Disposal Facilities 5-26
Section 5.24 Large-Format Retail Establishments 5-30
Section 5.25 Mining of Gravel, Sand and/or Other Minerals 5-35
Section 5.26 Motel or Hotel 5-42
Section 5.27 Ponds 5-42
Section 5.28 Private Schools 5-43
Section 5.29 Rooming House or Boarding House 5-43
Section 5.30 Senior Housing Apartments 5-44
Section 5.31 Shooting Ranges, Gun Clubs 5-44
Section 5.32 Wireless Communication Facilities 5-46
Section 5.33 Yard Waste Composting Facilities 5-59

Article 6 General Provisions 6-1

Section 6.1 Application 6-1
Section 6.2 Accessory Buildings and Structures 6-1
Section 6.3 Agricultural Exemption 6-3
Section 6.4 Building Grades 6-3

Section 6.5 Buildings to Be Moved or Demolished 6-3
Section 6.6 Drive-In/Drive-Thru Businesses 6-4
Section 6.7 Dwellings in Non-Residential Districts 6-4
Section 6.8 Essential Services 6-4
Section 6.9 Garage Sales, Rummage Sales and Similar Activities 6-5
Section 6.10 Home Occupations 6-5
Section 6.11 Impact Assessment 6-6
Section 6.12 One Lot, One Building 6-8
Section 6.13 Open Air Businesses/Outdoor Sales and Display of Products 6-8
Section 6.14 Open Space Preservation 6-9
Section 6.15 Seasonal and Temporary Outdoor Sales Operations 6-13
Section 6.16 Structural Damage 6-15
Section 6.17 Television Satellite Antennas 6-16
Section 6.18 Temporary Dwellings and Construction Offices 6-16
Section 6.19 Temporary Sales Offices 6-17
Section 6.20 Trash 6-21
Section 6.21 Unlawful Buildings, Structures, Site Designs and Uses 6-22
Section 6.22 Unsafe Buildings 6-22
Section 6.23 Water Supply and Sewage Disposal 6-22
Section 6.24 Keeping of Farm Animals 6-23
Section 6.25 Wind Energy Conversion Systems 6-23

Article 7 Landscaping, Screening, Fences and Walls 7-1

Section 7.1 Contents 7-1
Section 7.2 Intent and Scope of Requirements 7-1
Section 7.3 Specific Landscaping Requirements for Zoning Districts 7-5
Section 7.4 General Landscaping Standards 7-10
Section 7.5 Standards for Landscape Materials 7-17
Section 7.6 Installation and Maintenance 7-19
Section 7.7 Treatment of Existing Plant Material and Landscape Improvements 7-21
Section 7.8 Modifications to Landscape Requirements 7-21
Section 7.9 Landscape Plan Submission Requirements 7-21
Section 7.10 Fence and Wall Standards 7-22

Article 8 Access, Circulation, Parking and Loading 8-1

Section 8.1 Required Road Frontage and Access 8-1
Section 8.2 Visibility at Intersections 8-1
Section 8.3 Access Management Standards 8-2
Section 8.4 Traffic Impact Studies 8-5
Section 8.5 General Off-Street Parking Requirements 8-8
Section 8.6 Off-Street Parking Requirements by Use 8-11
Section 8.7 Off-Street Parking Lot Construction and Operation 8-16
Section 8.8 Parking and Storage of Commercial and Recreational Vehicles 8-19
Section 8.9 Off-Street Loading Requirements 8-21

Section 8.10 Safety Paths 8-21

Article 9 Signage 9-1

Section 9.1 Contents 9-1
Section 9.2 Purpose 9-1
Section 9.3 Definitions 9-1
Section 9.4 Signs Prohibited in All Districts 9-2
Section 9.5 Signs Allowed without a Permit 9-4
Section 9.6 Schedule of Sign Regulations 9-7
Section 9.7 Signs in Residential Districts 9-9
Section 9.8 Signs in Non-Residential Districts 9-10
Section 9.9 Billboards 9-16
Section 9.10 Temporary Signs 9-17
Section 9.11 Sign Design Standards 9-19
Section 9.12 Sign Permit Review Process 9-22
Section 9.13 Inspection and Maintenance 9-24
Section 9.14 Non-Conforming Signs 9-24
Section 9.15 Removal of Prohibited Signs in Public Places 9-25
Section 9.16 Removal of Unauthorized Signs from Public Rights-of-Way 9-25
Section 9.17 Appeals 9-25

Article 10 Environmental Provisions 10-1

Section 10.1 Environmental Performance Regulations 10-1
Section 10.2 Exterior Lighting 10-4
Section 10.3 Natural Feature Setback 10-9
Section 10.4 Open Dumping 10-12
Section 10.5 Outdoor Storage 10-12
Section 10.6 Safety 10-13

Article 11 Private Roads 11-1

Section 11.1 Intent 11-1
Section 11.2 General Requirements 11-1
Section 11.3 Design and Construction Standards 11-2
Section 11.4 Review and Approval Process 11-4
Section 11.5 Private Road Easement Agreements 11-7
Section 11.6 Private Road Maintenance Agreements 11-8
Section 11.7 Existing Nonconforming Roads 11-9
Section 11.8 Extension of Existing Private Roads 11-9
Section 11.9 Variances and Appeals 11-10
Section 11.10 Fees 11-10

Article 12 Site Plan Review 12-1

Section 12.1 Purpose 12-1
Section 12.2 Site Plan Approval Required 12-1
Section 12.3 Review and Approval Procedures 12-2
Section 12.4 Administrative Review and Approval Procedures for Minor Site Plans 12-10
Section 12.5 Criteria for Site Plan Approval 12-11
Section 12.6 Amendment of Approved Site Plans 12-13
Section 12.7 Modifications During Construction 12-13
Section 12.8 Phasing of Development 12-13
Section 12.9 Performance Guarantees 12-13

Article 13 Condominium Development 13-1

Section 13.1 Intent 13-1
Section 13.2 Applicability 13-1
Section 13.3 Definitions 13-1
Section 13.4 Building Condominiums 13-1
Section 13.5 Site Condominiums 13-2
Section 13.6 Projects Having Both Building and Site Condominium Units 13-3
Section 13.7 Conversion Condominiums 13-3
Section 13.8 Standards for Master Deeds 13-4
Section 13.9 Additional Requirements for Condominium Projects 13-5

Article 14 Planned Unit Development 14-1

Section 14.1 Intent 14-1
Section 14.2 Eligibility Criteria 14-1
Section 14.3 Project Design Standards 14-3
Section 14.4 Density Credit for Exemplary Projects 14-18
Section 14.5 Project Approval Criteria 14-18
Section 14.6 Procedures for Review and Approval 14-19
Section 14.7 Phasing and Commencement of Construction 14-30
Section 14.8 Effect of Approval 14-30
Section 14.9 Modifications to Approved Final PUD Plans 14-31
Section 14.10 Recording of Planning Commission and Township Board Actions 14-33
Section 14.11 Costs Associated with PUD Review 14-33

Article 15 Nonconformities 15-1

Section 15.1 Intent 15-1
Section 15.2 Nonconforming Lots 15-1
Section 15.3 Nonconforming Uses of Land 15-2
Section 15.4 Nonconforming Structures 15-2
Section 15.5 Nonconforming Uses of Structures and Land 15-2
Section 15.6 Repairs and Maintenance 15-3
Section 15.7 Uses Allowed as Special Land Uses Not Nonconforming Uses 15-4
Section 15.8 Change of Tenancy of Ownership 15-4

Article 16 Administration and Enforcement 16-1

Section 16.1 Zoning Administrator 16-1
Section 16.2 Ordinance Enforcement Officer 16-2
Section 16.3 Zoning Compliance Permits 16-2
Section 16.4 Building Permits 16-4
Section 16.5 Certificates of Occupancy 16-5
Section 16.6 Compliance with Plans 16-7
Section 16.7 Fees 16-7
Section 16.8 Performance Guarantees 16-8
Section 16.9 Notice of Public Hearing 16-10
Section 16.10 Violations and Penalties 16-12
Section 16.11 Completion of Construction 16-13

Article 17 Zoning Board of Appeals 17-1

Section 17.1 Establishment 17-1
Section 17.2 Membership 17-1
Section 17.3 Meetings 17-2
Section 17.4 Voting 17-2
Section 17.5 Minutes 17-2
Section 17.6 Jurisdiction 17-2
Section 17.7 Appeals 17-2
Section 17.8 Variances 17-3
Section 17.9 Appeals from the Zoning Board of Appeals 17-5

Article 18 Amendment 18-1

Section 18.1 Initiating Amendments 18-1
Section 18.2 Amendment Procedure 18-1
Section 18.3 Information Required 18-1
Section 18.4 Publication 18-2
Section 18.5 Conditional Rezoning 18-3

Article 19 Planning Commission 19-1

Section 19.1 Authority of the Planning Commission 19-1
Section 19.2 Jurisdiction of the Planning Commission 19-1
Section 19-3 Rules of Procedure of the Planning Commission 19-1
Section 19-4 Powers and Duties of the Planning Commission 19-1

ARTICLE 1
TITLE, PURPOSE, ENABLING AUTHORITY AND CONDITIONS OF ENACTMENT

1.1 Title. This Ordinance shall be known and may be cited as "The Charter Township of Oxford Zoning Ordinance."

1.2 Purpose. The purpose of this Ordinance is to provide in Oxford Charter Township for the establishment of districts which regulate the use of land and structures:

A. To meet the needs of the state's citizens for food, fiber, energy, and other natural resources, places of residence, recreation, industry, trade, service, and other uses of land;

B. To insure that use of the land shall be situated in appropriate locations and relationships;

C. To limit the inappropriate overcrowding of land and congestion of population, transportation systems, and other public facilities;

D. To facilitate adequate and efficient provision for transportation systems, sewage disposal, water, energy, education, recreation, and other public service and facility requirements;

E. And to promote public health, safety, and welfare.

For these purposes, the Board by this Ordinance divides the township into districts of such number, shape, and area as it considers best suited to carry out the act by which this Ordinance is authorized, and to achieve specific land management objectives and avert or solve specific land use problems, including the regulation of growth and development and the establishment of districts in areas subject to damage from flooding or erosion. This Ordinance regulating land development is also adopted for designating or limiting the location, height, number of stories, and size of dwellings, buildings, and structures that may be erected or altered, and the specific uses of such dwellings, buildings and structures; and the maximum number of families which may be housed in buildings, dwellings, and structures, erected or altered. The provisions of this Ordinance are intended to be uniform for each class of land or buildings, dwellings, and structure, throughout each district, but the provisions in one district may differ from those in other districts. The Board does not regulate nor control the drilling, completion, or op-

eration of oil or gas wells, or other wells drilled for oil or gas exploration purposes and shall not have jurisdiction with reference to the issuance of permits for the location, drilling, completion, operation, or abandonment of those wells.

1.3 Enabling Authority. This Ordinance is adopted pursuant to the Michigan Zoning Enabling Act (Act 110 of 2006, as amended) Township Planning Act (Act 168 of 1959, as amended), the Natural Resources and Environmental Policy Act (Act 451 of 1994, as amended), and the Mobile Home Commission Act (Act 96 of 1987 as amended). The Michigan Zoning Enabling Act is hereby made a part of this Ordinance just as if said Act were repeated word-for-word herein.

1.4 Scope and Construction of Regulations.

A. This Ordinance shall be liberally construed in such manner as to best implement its purpose. In interpreting and applying the provisions of this Ordinance, the requirements shall be held to be the minimum for the promotion of the public health, safety, convenience, comfort, prosperity and general welfare.

B. No building or structure, or part thereof, shall hereafter be erected, constructed, reconstructed or altered, and no new use or change shall be made of any building, structure or land, or part thereof, except as permitted by the provisions of this Ordinance.

C. Where a condition imposed by a provision of this Ordinance upon the use of any lot, building, or structure is conflicting with a condition imposed by any other provision of this Ordinance, or by the provision of an ordinance adopted under any other law, the provision which is more restrictive shall govern.

D. Nothing within this Ordinance shall be construed to prevent compliance with an order by the appropriate authority to correct, improve, strengthen, or restore to a safe or healthy condition any part of a building or premises declared unsafe or unhealthy.

1.5 Relationship to Other Ordinances, Regulations or Agreements. This Ordinance is not intended to abrogate or annul any ordinance, rule, regulation, permit, easement, covenant or other private agreement previously adopted, issued or entered into and not in conflict with the provisions of this Ordinance.

However, where the regulations of this Ordinance are more restrictive or impose higher standards or requirements that other such ordinances, rules, regulations, permits, easements, covenants or other private agreements, the requirements of this Ordinance shall govern.

1.6 Vested Right. Nothing in this Ordinance shall be interpreted or construed to give rise to any permanent vested right in the continuation of any particular use, district, zoning classification or permissible activity therein. Any such use, dis-

trict, zoning classification or activity is hereby declared to be subject to subsequent amendment, change or modification as may be necessary to the preservation or protection of the public health, safety and welfare.

1.7 Validity and Severability. This Ordinance and the various parts, sentences, paragraphs, sections and clauses it contains are hereby declared to be severable. Should any part, sentence, paragraph, section or clause be declared unconstitutional or invalid by any court of competent jurisdiction for any reason, such judgment shall not affect the validity of the Ordinance as a whole or any part thereof, other than the part so declared to be unconstitutional or invalid.

Furthermore, should the application of any provision of this Ordinance to a particular property, building or structure be adjudged invalid by any court of competent jurisdiction, such judgment shall not affect the application of said provision to any other property, building or structure in the Township, unless otherwise stated in the judgment.

1.8 Repealer. The Zoning Ordinance text and map adopted by Oxford Charter Township on November 2, 1988, and all amendments thereto, shall be repealed on the effective date of this Ordinance. The repeal of the above Ordinance and its amendments does not affect or impair any act done, offense committed or right accruing, accrued or acquired, or any liability, penalty, forfeiture or punishment incurred prior to the time enforced, prosecuted or inflicted.

1.9 Effective Date. The effective date of this Ordinance shall depend on whether the Ordinance is requested to be submitted to the Township electors for approval. A notice of intent to make such a request must be filed with the Township Clerk within 7 days of publication of this Ordinance. If such a notice has not been timely submitted, this Ordinance shall take effect on the eighth day following publication. If a notice of intent is timely filed, a petition requesting the submission of this Ordinance to the Township electors must be filed with the Township Clerk within 30 days of the publication. If such a petition has been timely filed, this Ordinance shall take effect immediately upon the final determination by the Township Clerk that it has been approved by a majority of the registered electors in the Township voting thereon. A petition requesting submission of this Ordinance to a vote of the electors must be signed by a number of registered Township electors that is not less than 15% of the total vote cast for all candidates for governor at the last preceding general election at which a governor was elected.

1.10 Adoption. We hereby certify that this Ordinance is a true copy of an ordinance as enacted by the Township Board of Trustees on the 14th day of March, 2007.

A. Date of Public Hearing held by Planning Commission: December 14, 2006.

B. Date of Planning Commission Resolution to Recommend Adoption of Zoning Ordinance Text and Map to Township Board: December 14, 2006.

C. Date of Township Board Resolution to Adopt Zoning Ordinance Text and Map: March 14, 2007.

D. Date Ordinance Shall Take Effect: March 29, 2007.

William Dunn, Supervisor

Clara J. Sanderson, Clerk

I, Clara J. Sanderson, Clerk of Oxford Charter Township, Oakland County, Michigan, hereby certify that notice of adoption of this Ordinance was published pursuant to the provisions of Section 103 of the Municipal Zoning Enabling Act (Public Act 110 of 2006, as amended) in a newspaper of general circulation in Oxford Charter Township on the 21st day of March, 2007.

Clara J. Sanderson, Clerk

3/29/07
Date

ARTICLE 2
RULES OF CONSTRUCTION AND DEFINITIONS

2.1 Rules Applying to Text. The following rules of construction apply to the text of this Ordinance:

A. The particular shall control the general.

B. Words used in the present text shall include the future.

C. Words used in the singular number shall include the plural and the plural shall include the singular, unless the context clearly indicates the contrary.

D. The word "shall" is always mandatory and not discretionary. The word "may" is permissive.

E. All measurements shall be to the nearest integer, unless otherwise specified herein.

F. The phrase “used for” includes “arranged for,” “designed for,” “intended for,” “occupied for,” and “maintained for.”

G. The word “building” includes the word “structure.” The word “build” includes the words “erect” and “construct.” A “building” or “structure” includes any part thereof.

H. The word "person" includes an individual, a corporation, a partnership, an incorporated association, or any similar entity.

I. Whenever a word or term defined herein appears in the text of this Ordinance, its meaning shall be construed as defined herein. Words or terms not herein defined shall have the meaning customarily assigned to them.

J. Unless the context clearly indicates the contrary, where a regulation involves two of more items, conditions, provisions, or events connected by the conjunction “and,” “or,” or “either/or,” the conjunction shall be interpreted as follows:

1. “And” indicates that all the connected items, conditions, provisions, or events shall apply.

2. “Or” indicates that the connected items, conditions, provisions, or events may apply singularly or in any combination.

3. "Either/or" indicates that the connected items, conditions, provisions, or events shall apply singularly but not in combination.

K. Catch words and catch lines shall in no way by their presence or absence limit or affect the meaning of this Ordinance.

L. Unless the context clearly indicates to the contrary, where an illustration accompanies any item within this Ordinance, the written text shall have precedence over said illustrations.

2.2 Definitions. Whenever used in this Ordinance, the following words and phrases shall have the meaning ascribed to them in this Section:

Accessory Building or Structure. A supplementary building or structure on the same lot or parcel of land as the principal building or buildings or part of the principal building occupied by or devoted exclusively to any accessory use.

Accessory Use. A use normally and naturally incidental to, subordinate to, and devoted exclusively to, the principal use of the land or buildings.

Adult Regulated Uses. Includes all of the following, each of which is regulated in Section 5.1.

1. *Adult Book or Supply Store.* An establishment having twenty percent (20) or more of its stock-in-trade or its sales devoted to the distribution, display, or storage of books, magazines, and other periodicals and/or photographs, drawings, slides, films, video tapes, recording tapes, and/or novelty items which are distinguished or characterized by their emphasis on matters depicting, describing, or relating to specified sexual activities or specified anatomical areas.

2. *Adult Motion Picture Theater.* An enclosed building used for presenting material distinguished or characterized by an emphasis on matter depicting, describing or relating to specified sexual activities or specified anatomical areas, for observation by patrons therein. Such establishment is customarily not open to the public generally, but only to one (1) or more classes of the public, excluding any minor by reason of age.

3. *Adult Motion Picture Theater, Adult Live Stage Performing Theater.* An enclosed building with a capacity of fifty (50) or more persons used for presenting material distinguished or characterized by an emphasis on matter depicting, describing or relating to specified sexual activities or specified anatomical areas, for observation by patrons therein. Such establishment is customarily not open to the public generally, but only to one (1) or more classes of the public, excluding any minor by reason of age.

4. *Adult Cabaret.* An establishment which features any of the following: topless dancers and/or bottomless dancers, go-go dancers, strippers, male and/or female impersonators or similar entertainers, or topless and/or bottomless waitpersons or employees, or any other form of nude or partially nude service or entertainment.

5. *Brand or Branding.* The creation of a permanent mark made on human tissue by burning with a hot iron or other instrument.

6. *Specified Anatomical Areas.* Specified anatomical areas means and includes any one (1) or more of the following: (a) less than completely covered human genitals, pubic region, buttocks, anus, or female breasts below a point immediately above the top of the areola; or (b) human male genitals in a discernible turgid state, even if completely and opaquely covered.

7. *Specified Sexual Activities.* Specified sexual activities means and includes any one (1) or more of the following: (a) the fondling or erotic touching of human genitals, pubic region, buttocks, anus or female breasts; (b) human sex acts, normal or perverted, actual or simulated, including but not limited to intercourse, oral copulation, and sodomy; (c) human masturbation, actual or simulated; (d) human excretory functions as part of, or as related to, any one of the activities described above, and (e) physical violence, bondage, mutilation, or rape, actual or simulated, as part of, or as related to, any of the activities described above.

Agribusiness Use. Uses that are frequently found in agricultural districts that have either a retail character, by virtue of customer and off-street parking characteristics, or an industrial character, by virtue of performance characteristics. Agribusiness uses includes, but is not limited to, pick-your-own farms, cider mills, farmers markets, farm dairies, feedlots and other confined operations and similar uses.

Agriculture. The use of land for tilling of the soil, the raising of tree and field crops, or animal husbandry as a source of income.

Aircraft. As defined in the Michigan Aeronautics Code, any contrivance now known, or hereafter invented, used, or designed for navigation of or flight in the air.

Airport. As defined in the Michigan Aeronautics Code, any location, either on land or water, which is used for the landing and take-off of aircraft, which provides facilities for the shelter, supply or care of aircraft, or for receiving or discharging passengers or cargo, and all appurtenant areas used or suitable for airport buildings or other airport facilities, and all appurtenant rights-of-way, whether heretofore or hereafter established.

Alley. A public thoroughfare which affords only a secondary means of access to abutting properties and not intended for general traffic circulation.

Altered. Any change in location or use of a building, or any change in the supporting members of a building such as bearing walls, columns, beams, joists, girders, and similar components, or any substantial change in the roof or exterior walls, or any change in the type of occupancy. The word "altered" also includes the words "reconstructed" and "alteration".

Animal Definitions.

1. *Domestic Pets.* Animals such as horses which are kept for pleasure riding purposes and ordinary household pets such as dogs, cats and pot-bellied pigs.

2. *Exotic or Wild Animal.* Any animal not defined as a farm animal or domestic pet**.**

3. *Farm Animal.* Livestock, including beef and dairy cattle, goats, hogs, horses, poultry, sheep, llamas, alpacas and other fur-bearing animals.

Animal Shelter. A building supported by a governmental unit or agency or by a nonprofit corporation where domestic pets or other animals are kept because of requirements of public health officials, loss by owner, neglect or violation of a public law or ordinance.

Antique Shop. A place offering primarily antiques for sale. An antique for the purpose of this Ordinance shall be a work of art, piece of furniture, decorative object, or the like, of or belonging to the past, at least thirty (30) years old. Antique shop does not include “secondhand store.”

Apartment. See Dwelling, Multiple-Family.

Appeal. An entreaty or demand for a hearing and/or review of facts and/or actions.

Arcade. A business establishment whose principal function is the offering for public use of any form of game machine, instrument or apparatus operated by coin, token or similar medium, but not including automatic machines for vending food, soft drinks or tobacco.

Architectural Features. Architectural features of a building shall include cornices, eaves, gutters, belt courses, sills, lintels, bay windows, chimneys, and decorative ornaments.

Area, Building. The total area taken on a horizontal plane at the main grade level of the principal buildings and accessory buildings, including uncovered porches, terraces, and steps.

Automobile Convenience Mart. A place where gasoline, motor oil, lubricants, or other minor accessories are retailed directly to the public on the premises or in combination with the retailing of items typically found in a convenience market, carry-out restaurant or supermarket.

Automobile Dealership. A building or premises used primarily for the sale of new or used automobiles not including farm equipment and recreational vehicles.

Automobile Repair Facility. A place where, with or without the sale of engine fuels, the following services may be carried out: general repair, engine rebuilding, rebuilding or reconditioning of motor vehicles; collision service, such as body, frame or fender straightening and repair; overall painting and vehicle rust-proofing.

Automobile Service Center. A building or premises used primarily for the sale and installation of major automobile accessories, such as tires, batteries, radios, air conditioners and mufflers, plus such services as brake adjustment, wheel alignment and balancing, but excluding any major mechanical repairs, collision work, undercoating or painting. Sale of gasoline (stored only in approved underground tanks) shall be incidental to the above enumerated activities.

Automobile Service Station. A building or structure designed or used for the retail sale of fuel (stored only in underground tanks), lubricants, air, water and other operating commodities for motor vehicles, aircraft or boats, and including the customary space and facilities for the installation of such commodities on or in such vehicles, and including space for facilities for the storage, minor repair, or servicing, but not including bumping, painting, refinishing, major repair and overhauling, steam cleaning, and rust proofing**,** (where the primary use of the premises is such), or high-speed washing thereof.

Automobile Wash or Car Wash Establishment. A building, or portion thereof, where self-propelled motor vehicles are washed as a commercial enterprise.

Basement. A space having not more than one-half (1/2) of its height above the average level of the adjoining ground. A basement shall be counted as a story for the purposes of height measurement if the vertical distance between the ceiling and the average level of the adjoining ground is more than five (5) feet (See Figure 1).

Figure 1

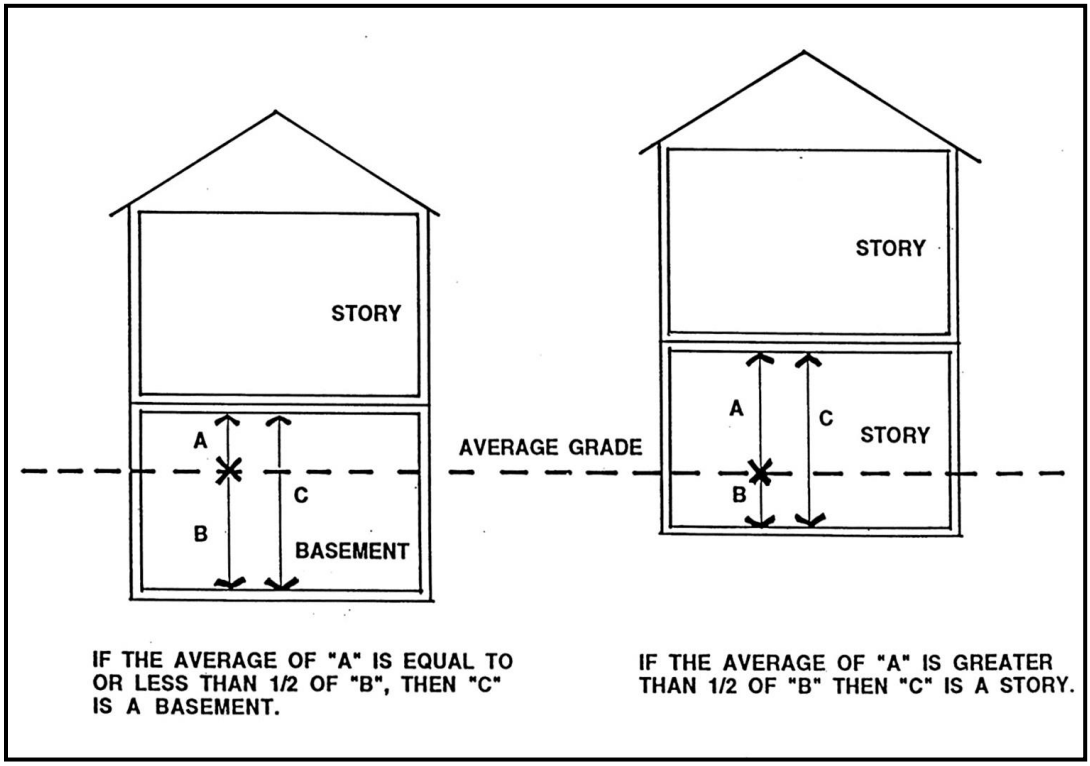

Bed and Breakfast Establishments.

1. *Bed and Breakfast Residence*. A dwelling unit with not more than two (2) guest rooms where:

   a. The owner is the occupant of the dwelling unit and the operator of the bed and breakfast establishment;
   b. The operator provides overnight accommodations for less than fourteen (14) days to guests in return for payment; and
   c. No kitchen facilities are provided for serving or preparing meals for overnight guests which are separate from those for the residence.

2. *Bed and Breakfast Inn.* A Single-family dwelling unit with not more than four (4) guest rooms where:

   a. The owner is the occupant of the dwelling unit and the operator of the bed and breakfast establishment;
   b. The operator provides overnight accommodations for less than fourteen (14) days to guests in return for payment; and
   c. No kitchen facilities are provided for serving or preparing meals for overnight guests which are separate from those for the residence.

3. *Bed and Breakfast Hotel.* A single-family dwelling unit with not more than eight (8) guest rooms where:

    a. The operator of the bed and breakfast establishment is the occupant of the dwelling unit;
    b. The operator provides overnight accommodations for less than fourteen (14) days to guests in return for payment; and
    c. No kitchen facilities are provided for serving or preparing meals for overnight guests which are separate from those for the residence.

Bedroom. A bedroom is a dwelling room used for or intended to be used solely for sleeping purposes, by human beings.

Berm. A landscaped mound of earth which has been contoured to blend with the surrounding terrain.

Block. The property abutting one side of a street and lying between the two (2) nearest intersecting streets (crossing or terminating), or between the nearest such street and railroad right-of-way, unsubdivided acreage, lake, river or live stream; or between any of the foregoing and any other barrier to the continuity of development.

Boarding House. A building other than a hotel, where for compensation and by prearrangement for definite periods, lodging, or lodging and meals are provided for three (3) or more persons, but not exceeding twenty (20) persons.

Bottomland. The land area of an inland lake or stream that lies below the ordinary high-water mark and that may or may not be covered by water.

Buffer. A landscaped area composed of plant material, wall, berm, or combination thereof, established and/or maintained to provide visual screening, noise reduction, and transition between conflicting types of land uses.

*Buildable Area***,** *or Gross Buildable Area*. That portion of the total land area of a site exclusive of required setbacks and adjacent road rights-of-way and/or easements not encumbered by bodies of open water, streams, 100-year floodplains, and wetlands (as defined by Charter Township of Oxford Ordinance No. 80B).

Building. Any structure, temporary of permanent, having one or more floors and a roof, and intended for the shelter or enclosure of persons, animals, and/or property.

Building, Accessory. See Accessory Building or Structure.

Building, Principal. A building in which is conducted the principal use of the lot on which it is situated.

Building, Temporary. A building which is not permanently affixed to the property, and is permitted to exist for a specific reason for a specified period of time.

Building Envelope. The area of a lot which is defined by the minimum setback requirements within which building construction is permitted by the terms of this Ordinance.

Building Height. The vertical distance measured from the grade plane to the highest point of the roof surface if a flat roof; to the deck line of mansard roofs; and to the mean height level between eaves and ridge for gables, hip and gambrel roofs. (See Figure 2).

Building Line. A line parallel to the front lot line at the minimum required front setback.

Building Official. The officer or other authority designated by the Township Board to administer and enforce the Building Code, or their properly qualified designee.

Building Permit. Written authority issued by the Building Official in conformity with the provisions of the Building Code.

Building Setback Line. The line formed by the outer surface of a structure or enclosure wall at or with the finished grade or surface of the ground; pertaining to and defining those minimum (building) setback lines which are established, in general, parallel to the front street or right-of-way, and within which setback area no part of a building shall project or be located, except as otherwise provided for by this Ordinance.

Figure 2 – Building Height

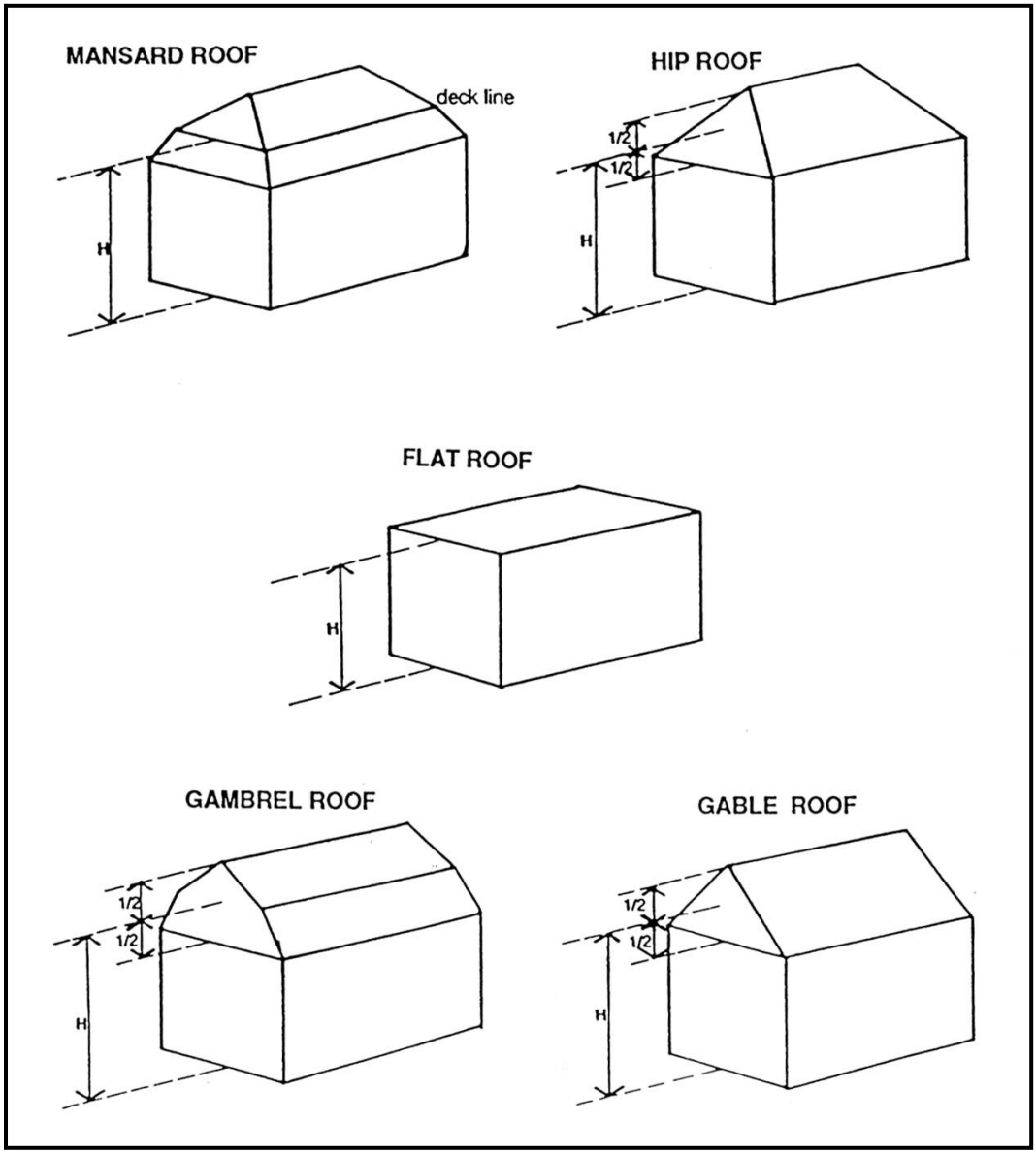

Bulk. The volume of a structure in cubic feet as determined by the dimensions taken from the outer surfaces of the exterior of the structure.

Caliper. American Nursery and Landscape Association standard for measurement of trunk size of deciduous tree nursery stock. Caliper of the trunk shall be taken 6" above the ground up to and including 4" caliper trees, and 12" above the ground for larger sizes. Plant materials other than deciduous trees shall be measured in accordance with the American Standard for Nursery Stock (ANSI Z60.1).

Campground. The temporary short-term resort or recreational uses and activities which take place on a lot or parcel of land in accordance with Act No. 368 of the

Public Acts of Michigan of 1978, Part 125 (MCL 333.12501 et seq., MSA 14.15(12501) et seq.), and the administrative rules promulgated under such Act as administered by the county, district or state public health departments.

Caretaker's Quarters. A dwelling unit for a watchman, caretaker or custodian, which is clearly incidental and accessory to the permitted principal use(s) on the parcel.

Church. A building wherein persons assemble regularly for religious worship, and is maintained and operated by an organized religious body, as well as those structures within a religious complex that, while ancillary to the central location of worship, support regular assembly for worship. Churches include, but shall not be limited to, temples, synagogues and mosques.

Clinic, Medical. An establishment where human patients who are not lodged overnight are admitted for examination and treatment by a group of physicians, dentists or similar professionals. A medical clinic may incorporate customary laboratories and pharmacies incidental to or necessary for its operation or to the service of its patients, but may not include facilities for overnight patient care or major surgery.

Clinic, Veterinary. An institution which is licensed by the appropriate agencies to provide for the care, diagnosis and treatment of sick or injured animals, including those in need of medial or surgical attention. A veterinary clinic may include customary pens and cages for the overnight boarding of animals and such related facilities as laboratories, testing services and offices.

Club or Lodge. An organization of persons for special purposes or for the promulgation of agriculture, sports, arts, science, literature, politics or the like, but not for profit, and generally open only to members and not the general public.

Commercial Use. A use of property in connection with the purchase, sale, barter, display, or exchange of goods, wares, merchandise, or services, and the maintenance or operation of offices.

Commercial Vehicles or Equipment. Commercial vehicles or equipment shall include, but shall not be limited to, tractors (excluding lawn tractors), bulldozers, earth carriers, drag lines, cranes, back hoes, dump trucks, stake trucks, flatbed trucks, panel trucks, cube vans, wreckers, septic tank pumpers, semi-tractors, tanker trucks, well-drilling rigs, welding trucks, semi-trailers, buses, and any other type of commercial or construction equipment, as well as any other motor vehicles not customarily used for passenger transport and/or having a payload of three (3) tons or greater.

Communication Tower. For purposes herein, the term “communication tower(s)” shall mean and include monopole, lattice, guyed or similar towers attached directly to the ground or to another structure, used for the transmission or reception

of radio, telephone, television, microwave, digital or any other form of telecommunication signal.

Condominium. A building or lot governed under Act 59, Public Acts of 1978, as amended. The following condominium terms shall apply in the application of this Ordinance:

1. *Building Condominium.* A condominium project in which two (2) or more condominium units share a common wall, roof and/or foundation, and/or in which condominium units are comprised of individual buildings and situated within uninterrupted general common elements without limited common elements dedicated to and/or associated with any of the condominium units.

2. *Condominium Documents.* See *Master Deed*.

3. *Condominium Project.* A plan or project consisting of not less than 2 condominium units established in conformance with the Condominium Act (P.A. 59 of 1978).

4. *Condominium Subdivision Plan.* The drawings and information prepared pursuant to section 66 of the Condominium Act (P.A. 59 of 1978).

5. *Condominium Unit.* That portion of the condominium project designed and intended for separate ownership and use, as described in the master deed, regardless of whether it is intended for residential, office, industrial, business, recreational, use as a time-share unit, or any other type of use.

6. *Contractable Condominium.* A condominium project from which any portion of the submitted land or buildings may be withdrawn in accordance with the Condominium Act (P.A. 59 of 1978).

7. *Conversion Condominium.* A condominium project containing condominium units some or all of which were occupied before the filing of a notice of taking reservations under section 71 of the Condominium Act (P.A. 59 of 1978).

8. *Convertible Area.* A unit or a portion of the common elements of the condominium project referred to in the master deed within which additional condominium units or general or limited common elements may be created in accordance with the Condominium Act (P.A. 59 of 1978).

9. *Co-Owner.* A person, firm, corporation, partnership, association, trust, or other legal entity or any combination of those entities, who owns a condominium unit within the condominium project. Co-owner includes land contract vendees and land contract vendors, except as the recorded master deed provides otherwise.

10. *Expandable Condominium.* A condominium project to which additional land may be added in accordance with the Condominium Act (P.A. 59 of 1978).

11. *General Common Elements.* The common elements other than the limited common elements.

12. *Limited Common Elements.* A portion of the common elements reserved in the master deed for the exclusive use of less than all of the co-owners.

13. *Master Deed.* The condominium document recording the condominium project to which are attached as exhibits and incorporated by reference the bylaws for the project and the condominium subdivision plan for the project.

14. *Mobile Home Condominium Project.* A condominium project in which mobile homes, as defined in section 2 of P.A. 96 of 1987, are intended to be located upon separate sites which constitute individual condominium lots or units.

15. *Site Condominium.* A condominium project in which each building alone is considered a condominium unit and is surrounded by appurtenant limited common elements, or in which individual units are lots.

16. *Site Condominium Lot.* A condominium unit within a site condominium project, together with any appurtenant limited common elements.

Conflicting Land Use. Any incompatible land uses that abut each other.

Convalescent or Nursing Home. A structure with sleeping rooms where persons are housed or lodged and are furnished with meals, nursing and medical care. Said home shall conform to, and qualify for license under, applicable State laws.

Convenience Store. A one-story, retail store that is designed and stocked to sell primarily food, beverages and other household supplies to customers who purchase a relatively few items (in contrast to a “supermarket”). Convenience stores are designed to attract a large volume of stop-and-go traffic.

Curb Cut. The entrance to or exit from a property provided for vehicular traffic to or from a public or private road.

Day Care Facilities, State Licensed.

1. *Adult Day Care Facility.*

    a. *Adult Family Day Care Home.* A private home in which six (6) or less adults eighteen (18) years of age or older, receive care for pe-

riods of less than twenty-four (24) hours a day. It includes facilities for adults who are aged, mentally ill, developmentally disabled, or physically handicapped that require supervision on an ongoing basis. An adult day care home does not include alcohol or substance abuse rehabilitation centers, residential centers for persons released from or assigned to a correctional facility, or any other facilities which do not meet the definition of adult day care center.

b. *Adult Group Day Care Home.* A private home in which more than six (6) but not more than twelve (12) adults eighteen (18) years of age or older, receive care for periods of less than twenty-four (24) hours a day. It includes facilities for adults who are aged, mentally ill, developmentally disabled, or physically handicapped that require supervision on an ongoing basis. An adult day care home does not include alcohol or substance abuse rehabilitation centers, residential centers for persons released from or assigned to a correctional facility, or any other facilities which do not meet the definition of adult day care center.

c. *Adult Day Care Center.* A facility, other than a private residence, receiving one or more persons, eighteen (18) years of age or older, for care for periods of less than twenty-four (24) hours a day. It includes facilities for adults who are aged, mentally ill, developmentally disabled or physically handicapped that require supervision on an ongoing basis. An adult day-care center does not include alcohol or substance abuse rehabilitation centers, residential centers for persons released from or assigned to a correctional facility, or any other facilities which do not meet the definition of adult day-care center.

2. *Child Day Care Facilities.* Includes the following definitions as defined and regulated by Public Act No. 116 of the Public Acts of 1973 as amended:

a. *Child Family Day Care Home.* A state-licensed, owner-occupied private residence in which one (1) but not more than six (6) minor children are received for care and supervision for periods less than twenty-four (24) hours a day unattended by a parent or legal guardian, excepting children related to an adult member of the owner's family by blood, marriage or adoption. It includes a home that gives care to an unrelated child for more than four (4) weeks in a calendar year.

b. *Child Group Day Care Home.* A state-licensed, owner-occupied private residence in which seven (7) but not more than twelve (12) minor children are received for care and supervision for periods less than twenty-four (24) hours a day unattended by a parent or legal guardian, excepting children related to an adult member of the

owner's family by blood, marriage or adoption. It includes a home that gives care to an unrelated child for more than four (4) weeks in a calendar year.

c. *Child Care Center.* Also known as "day care center", a state-licensed facility, other than a private residence, receiving one (1) or more minor children for care and supervision for periods less than twenty-four (24) hours, and where the parents or guardians are not immediately available to the child.

Depth-to-Width Ratio. The ratio of the lot depth to the lot width.

Development. The modification of a parcel, alteration of terrain, or construction, modification or relocation of buildings or structures.

Distribution Center. A use which typically involves both warehouse and office/administration functions, where short and/of long term storage takes place in connection with the distribution operations of a wholesale or retail supply business.

Drive or Driveway. A vehicular passageway designed or used to provide access to or between parking, loading or drop-off areas on a lot from a public or private road.

Driveway, Common or Shared. A driveway providing vehicular access to two (2) lots from an adjacent public or private road.

District. A portion of the Township within which certain uses of land and/or buildings are permitted and within which certain regulations and requirements apply under the provisions of this Ordinance.

Drive-In Establishment. A business establishment so designed that its operation involves providing service to patrons while they are in their car, rather than within a building or structure.

Dwelling or Dwelling Unit. One or more rooms with bathroom and principal kitchen facilities designed as a self-contained unit for permanent or temporary occupancy by one (1) family for living, cooking and sleeping purposes. In no case shall a travel trailer, motor home, mobile home, trailer coach, automobile chassis, tent or other portable building be considered a dwelling in single-, multiple-, or two-family residential areas. In cases of mixed occupancy where a building is occupied in part as a dwelling unit, the part so occupied shall be deemed a dwelling unit for the purpose of this Ordinance and shall comply with the provisions thereof relative to dwellings.

Dwelling, Multiple-Family. A building used for and designed as a residence for three (3) or more families living independently of each other and each having

their own cooking facilities therein, including apartment buildings, townhouses, and apartment hotels, but not including mobile homes.

Dwelling, One-Family. A detached building designed for or occupied exclusively by one (1) family; also known as a single-family dwelling.

Dwelling, Two-Family or Duplex. A detached building designed for, or occupied exclusively by two (2) families living independently of each other; also known as a duplex dwelling.

Efficiency Apartment. A dwelling unit with a bathroom and principal kitchen facilities designed as a self-contained unit for occupancy for living, cooking and sleeping purposes and having no separate, designated bedroom.

Electronic Message Sign (LED). A sign with a fixed or changing message composed of a series of lights, fiber optic, or light-emitting diodes (LED) that may be changed through electronic means. A time and/or temperature sign shall not be considered as an LED sign.

Erected. Includes built, constructed, reconstructed, moved upon, or any physical operations on the land required for the building. Excavations, fill, drainage and the like shall be considered a part of erection.

Essential Services. The phrase "essential services" means the erection, construction, alteration, operation, or maintenance by public utilities or municipal departments or commissions of underground, surface, or overhead gas, electrical, steam or water transmission or distribution systems, collection, communication, supply or disposal systems, including mains, drains, sewers, pipes, conduits, wires, cables, fire alarm boxes, traffic signals, hydrants, police call boxes, towers, pools, and other similar equipment or accessories reasonably in connection therewith for the furnishing of adequate service by such public utilities or municipal departments or commissions for the public health or general welfare, but not including buildings other than such buildings as are primarily enclosures or shelters of the above essential services. Essential services shall not include cellular telephone facilities including cellular telephone transmitting towers.

Fairgrounds. Property used for, but not limited to, the following uses: agricultural related office buildings, animal shows and judging; carnivals, circuses, community meeting or recreation buildings and uses; food booths and stands; games, rides, rodeos, sales and auctions, storage, theaters.

Family. A family shall be defined by one (1) of the following:

1. One (1) or more persons related by blood, marriage, adoption, or guardianship, plus not more than two (2) persons not so related, who are either domestic employees, caregivers, such as a nurse, nanny, or physical therapist, or persons who occupy rooms for which compensation may or may not be paid, living together as a single housekeeping unit.

2. Two (2) persons and their children by natural birth or adoption, plus not more than two (2) persons not so related, who are either domestic employees, care givers, such as a nurse, nanny or physical therapist, or persons who occupy rooms for which compensation may or may not be paid.

3. A functional family living together as a single housekeeping unit.

Farm. The land, plants, animals, buildings, structures, including ponds used for agricultural or aquacultural activities, machinery, equipment, and other appurtenances used in the commercial production of farm products.

Farm Operation. The operation and management of a farm or a condition or activity that occurs at any time as necessary on a farm in connection with the commercial production, harvesting, and storage of farm products, and includes, but is not limited to:

1. Marketing produce at roadside stands or farm markets.

2. The generation of noise, odors, dust, fumes, and other associated conditions.

3. The operation of machinery and equipment necessary for a farm including, but not limited to, irrigation and drainage systems and pumps and on-farm grain dryers, and the movement of vehicles, machinery, equipment, and farm products and associated inputs necessary for farm operations on the roadway as authorized by the Michigan vehicle code, Act No. 300 of the Public Acts of 1949, being sections 257.1 to 257.923 of the Michigan Compiled Laws.

4. Field preparation and ground and aerial seeding and spraying.

5. The application of chemical fertilizers or organic materials, conditioners, liming materials, or pesticides.

6. Use of alternative pest management techniques.

7. The fencing, feeding, watering, sheltering, transportation, treatment, use, handling and care of farm animals.

8. The management, storage, transport, utilization, and application of farm by-products, including manure or agricultural wastes.

9. The conversion from a farm operation activity to other farm operation activities.

10. The employment and use of labor.

Farm Product. Those plants and animals useful to human beings produced by agriculture and includes, but is not limited to, forages and sod crops, grains and feed crops, field crops, dairy and dairy products, poultry and poultry products, cervidae, livestock, including breeding and grazing, equine, fish, and other aquacultural products, bees and bee products, berries, herbs, fruits, vegetables, flowers, seeds, grasses, nursery stock, trees and tree products, mushrooms, and other similar products, or any other product which incorporates the use of food, feed, fiber, or fur, as determined by the Michigan commission of agriculture.

Fence. A permanent partition, structure or gate erected as a dividing marker, barrier or enclosure, and not a part of a principal building or structure or other accessory structure.

Floodplain. That area of land adjoining a river, stream, watercourse, or other body of water which will be inundated by a 100-year flood, and where evidence exists that such flood has occurred, or would have occurred in the past given the current land configuration.

Floor Area, Gross (GFA). The sum of the gross horizontal area of the floor or floors measured from the exterior faces of the exterior walls or from the centerline of walls separating two (2) buildings. The “gross floor area" of a building shall include the basement (see definition) floor area when more than one-half of the basement height is above the established curb level or finished lot grade, whichever is higher. Any space devoted to off-street parking or loading shall not be included in "gross floor area". Areas of basements, unfinished attics, utility rooms, breezeways, porches (enclosed or unenclosed) or attached garages are not included.

Floor Area, Usable (UFA). The measurement of usable floor area shall be that portion of floor area (measured from the interior face of the exterior walls) used for or intended to be used for services to the public as customers, patrons, clients, or patients; including areas occupied by fixtures or equipment used for display or sale of goods or merchandise, but not including areas used or intended to be used principally for storage of merchandise, utility or mechanical equipment rooms or sanitary facilities. In the case of a half-story area, the usable floor area shall be considered to be only that portion having a clear height above it of four (4) feet or more.

Foster Care Facilities, State Licensed.

1. *Adult Foster Care Facility.* A state-licensed establishment that provides foster care to adults. It includes facilities and foster care homes for adults who are aged, mentally ill, developmentally disabled, or physically handicapped who require supervision on an ongoing basis but who do not require continuous nursing care. An adult foster care facility does not include convalescent or nursing homes, homes for the aged, hospitals, alcohol or substance abuse rehabilitation centers, residential centers for

persons released from or assigned to a correctional facility, or any other facilities which have been exempted from the definition of adult foster care facility by the Adult Foster Care Facility Licensing Act, Public Act No. 218 of the Public Acts of 1979 as amended. The following additional definitions shall apply in the application of this Ordinance:

a. *Adult Foster Care Small Group Home.* A facility with the approved capacity to receive twelve (12) or fewer adults who are provided supervision, personal care, and protection in addition to room and board, for twenty-four (24) hours a day, five (5) or more days a week, and for two (2) or more consecutive weeks for compensation.

b. *Adult Foster Care Large Group Home.* A facility with approved capacity to receive at least thirteen (13) but not more than twenty (20) adults who are provided supervision, personal care, and protection in addition to room and board, for twenty-four (24) hours a day, five (5) or more days a week, and for two (2) or more consecutive weeks for compensation.

c. *Adult Foster Care Family Home.* A private residence with the approved capacity to receive six (6) or fewer adults who are provided supervision, personal care, and protection in addition to room and board, for twenty-four (24) hours a day, five (5) or more days a week and for two (2) or more consecutive weeks for compensation. The adult foster care family home licensee must be a member of the household and an occupant of the residence.

d. *Adult Foster Care Congregate Facility.* An adult foster care facility with the approved capacity to receive more than twenty (20) adults who are provided supervision, personal care, and protection in addition to room and board, for twenty-four (24) hours a day, five (5) or more days a week and for two (2) or more consecutive weeks for compensation.

2. *Child Foster Care Facility.* A state-licensed establishment that provides foster care to minor children. The following additional definitions shall apply in the application of this Ordinance:

a. *Child Foster Family Home.* A private home in which one (1) but not more than four (4) minor children, who are not related to an adult member of the household by blood, marriage, or who are not placed in the household pursuant to the adoption code, Chapter X of Act No. 288 of the Public Acts of 1939, being sections 710.21 to 710.70 of the Michigan Compiled Laws, are given care and supervision for twenty-four (24) hours a day, for four (4) or more days a week, for two (2) or more consecutive weeks, unattended by a parent or legal guardian.

b. *Child Foster Family Group Home.* A private home in which more than four (4) but fewer than seven (7) minor children, who are not related to an adult member of the household by blood, marriage, or who are not placed in the household pursuant to Ordinance X of Act No. 288 of Public Acts of 1939, are provided care for twenty-four (24) hours a day, for four (4) or more days a week, for two (2) or more consecutive weeks, unattended by a parent or legal guardian.

Frontage, Road or Street. The distance for which a lot line of a lot (or combination of lots) adjoins a public road or street, from one lot line intersecting said street to the furthest distant lot line intersecting the same street, excluding any distance where continuous frontage is interrupted by other parcels of land.

Functional Family. A group of no more than four (4) persons, plus their dependent children, having a relationship which is functionally equivalent to a family. The relationship must be of a permanent and distinct character with a demonstrable and recognizable bond characteristic of a cohesive unit. A functional family shall not include any society, club, fraternity, sorority, association, lodge, organization or group of students or other individuals, exceeding four (4) persons in number, where the common living arrangement or basis for the establishment of the housekeeping unit is temporary.

Garage, Commercial. A building or structure designed or used for the storage, care, repair or commercial display of automobiles, tractors, trucks, or other power equipment.

Garage, Private. An accessory building intended or designed to be used for storage of non-commercial motor vehicles.

Gas Station. See Automobile Service Station.

Grade. The degree of rise or descent of sloping surface.

Grade, Finished. The final elevation of the ground surface after development.

Grade, Natural. The elevation of the ground surface in its natural state, before man-made alterations.

Figure 3a – Grade

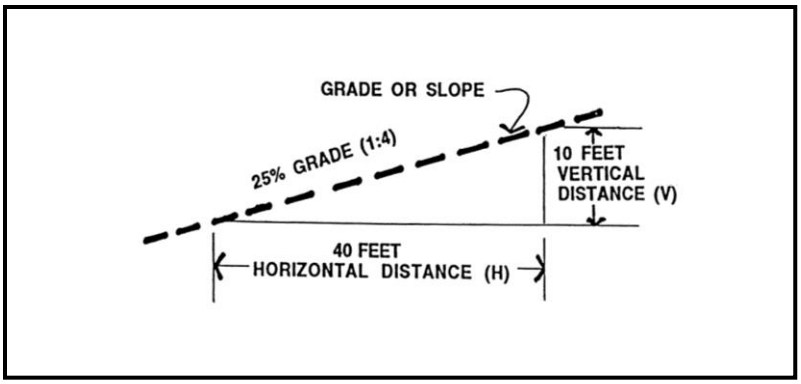

Figure 3b – Natural and Finished Grade

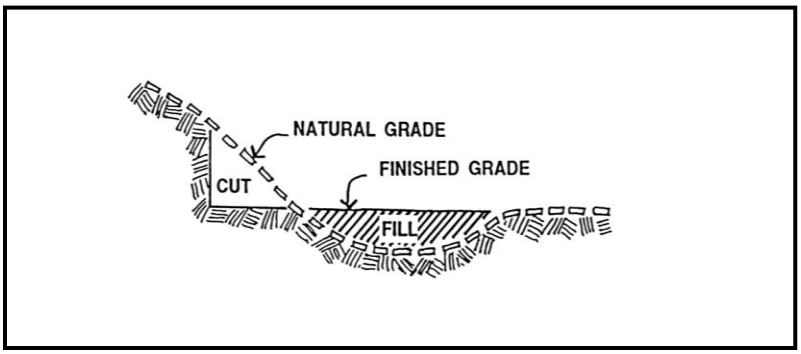

Grade Plane. A reference plane representing the average of finished ground level adjoining the building at exterior walls. Where the finished ground level slopes away from the exterior walls, the reference plan shall be established by the lowest points within the area between the building and the lot line or, where the lot line is more than six (6) feet from the building, between the building and a point six (6) feet from the building.

Greenbelt. A strip of land of specified width and location reserved for the planting of shrubs and/or trees to serve as an obscuring screen or buffer strip.

Greenway. A linear strip of open space, with or without pedestrian or non-motorized transportation facilities, often following a natural feature of the landscape, railroad right-of-way, or utility easement.

Gross Buildable Area. See *Buildable Area, Gross*.

Ground Water. Any water found under the surface of the earth.

Gym or Gymnasium. A room or building equipped for gymnastics, exercise or sport.

Hazardous Substance. Hazardous substances include hazardous chemicals as defined by the Michigan Department of Public Health and the Michigan Department of Labor; flammable and combustible liquids as defined by the Michigan Department of State Police, Fire Marshall Division; hazardous materials as defined by the U.S. Department of Transportation; and critical materials, polluting materials, and hazardous waste as defined by the Michigan Department of Natural Resources. Petroleum products and waste oil are subject to regulation under this Ordinance and are also considered hazardous substances.

Home Improvement Center. A facility of more than 30,000 square feet of gross floor area, engaged in the retail sale of various basic hardware lines, such as tools, builder's hardware, paint and glass, house wares and household appliances, garden supplies and cutlery.

Home Occupation. Any use customarily conducted entirely within a dwelling and carried on by the inhabitants thereof, which use is clearly incidental and secondary to the use of the dwelling for dwelling purposes and does not change the exterior of the property or affect the residential character of the neighborhood.

Horse Riding Stables and Sales Barns. Any establishment in which, for business purposes, 6 or more horses or ponies are rented, hired, or loaned for riding, or where horses or ponies owned by others are sold or offered for sale.

Hospital. An institution providing health services, primarily for in-patients and medical or surgical care of the sick or injured, including as an integral part of the institution, such related facilities as laboratories, outpatient departments, training facilities, central service facilities, and staff offices.

Hotel. A building containing rooms for sleeping purposes for more than twenty (20) transients and where only a general kitchen and dining room is provided.

Impervious Surface. A surface that has been compacted or covered with a layer of material so that it is highly resistant to infiltration by water.

Indoor Recreation Center. An establishment which provides indoor exercise facilities and indoor court sports facilities, and which may include spectator seating in conjunction with the sports facilities. For the purposes of the Ordinance, a bowling establishment shall be considered a type of indoor recreation center.

Industrial Park. A special or exclusive type of planned industrial area designed and equipped to accommodate a community of industries, providing them with all necessary facilities and services in attractive surroundings among compatible neighbors.

Institution. An organization having a social, educational or religious purpose established by law, custom, practice or a system to serve a public.

Junk. All rubbish, refuse, waste material, and garbage, including, but not limited to, the following: waste composed of animal, fish, fowl, fruit or vegetable matter, dead animals, putrescible and non-putrescible solid waste (except body wastes), ash, glass, cans, bottles, discarded or abandoned machinery, household appliances, industrial wastes, discarded, inoperative, dismantled or partially dismantled motorized vehicles or parts thereof. This shall not preclude home or farm composting for on-site use.

Junk Yard or Salvage Yard. Any land or building used for abandonment, storage, keeping, collecting, or baling or paper, rags, scrap metals, other scrap or discarded materials, or for abandonment, demolition, dismantling, storage or salvaging of automobiles or other vehicles not in running condition, machinery, or parts thereof.

Kennel, Commercial. Any lot or premises on which five (5) or more dogs, cats or similar domestic pets greater than six (6) months of age are confined, housed, groomed, bred, boarded, trained or sold in exchange for remuneration. Commercial kennels shall not be construed to include retail pet stores.

Kennel, Private. An establishment which is accessory and incidental to a single family dwelling where four (4) or more dogs, cats or similar domestic pets greater than six (6) months of age are confined or kept, for boarding purposes only, without remuneration. This definition does not include sales, breeding or training activities.

Laboratory. A place in which the principal use is devoted to experimental, routine or basic study such as testing and analytical operations.

Lake. A permanent natural or man-made body of surface water of at least five (5) acres in area.

Landfill Definitions. Refer to *Hazardous Waste Definitions* for additional definitions.

1. *Ashes*. The residue from burning of wood, coal, coke or other combustible materials.

2. *Bulky Wastes.* Large items of refuse, including but not limited to, appliances, vehicles, furniture, large auto parts, tires, trees and branches, stumps and flotage.

3. *Cell*. Compacted refuse completely enveloped by cover material.

4. *Facility*. Any solid waste disposal site, system or process, the operation thereof including, but not limited to personnel, equipment and buildings.

5. *Garbage.* Any putrescible solid and semi-solid animal or vegetable wastes resulting from the production, handling, preparation, cooking, serving or consumption of food or food materials.

6. *Impermeable*. A hydraulic conductivity of no greater than 1 x (10) - 7 centimeters per second as determined by field and/or laboratory test made according to standard test methods. A medium has a hydraulic conductivity of unit length per unit volume of groundwater at the prevailing viscosity through a cross section of unit area, measured at right angles to the direction of flow, under a hydraulic gradient of unit change in head through unit length of flow.

7. *Industrial Solid Waste.* Any waste substance or a combination thereof resulting from the operation of or from any process of industry, manufacturing, trade or business or from the development of any agricultural or natural resources.

8. *Inert Solid Waste*. Wastes including, but not limited to, glass, crockery, brick, plastics, rubber or other materials which are shown through analytical testing to have minimum potential for environmental degradation and leachate production.

9. *Landfill*. Any disposal area or tract of land, building unit or appurtenance or combination thereof that is used to collect, store, handle, dispose of, bury, cover over, or otherwise accept or retain refuse as herein defined.

10. *Leachate*. Fluid that has percolated through solid waste and which contains contaminants consisting of dissolved or suspended materials, chemicals and microbial waste products from the solid waste.

11. *Lift*. A layer of refuse cells which raise the ground elevation to an approximately common level.

12. *Other Wastes*. Garbage, refuse, decayed wood, sawdust, shavings, bark, lime cinders, offal, oil, tar, dye-stuffs, acids, chemicals and all discarded materials other than sewage or industrial wastes.

13. *Refuse*. Any putrescible or non-putrescible solid waste, except human excreta, but including garbage, rubbish, ashes, street cleaning, dead animals, offal and solid agricultural, commercial, industrial, hazardous and institutional wastes and construction wastes resulting from the operation of a contractor.

14. *Roads on Site.* Roads designated on approved plans and such other areas used by vehicles and/or equipment for travel on a regular basis, other than for travel on an infrequent basis necessitated by the operation of the landfill such as trucks and/or equipment going to and from a regular course of travel to the area which is currently being filled.

15. *Rubbish*. Any non-putrescible solid waste, excluding ashes, such as cardboard, paper, plastic, metal or glass food containers, rags, waste metal, yard clippings, small pieces of wood, excelsior, rubber leather, crockery, and other similar materials.

16. *Sewage*. Water-carried human or animal wastes from septic tanks, water closets, residences, buildings, industrial and municipal establishments, other places, together with such ground water infiltration, subsurface water, mixtures of industrial wastes or other wastes as may be present.

17. *Sludge*. A semi-liquid sediment resulting from industrial, municipal establishments, or other places, together with such ground water infiltration, subsurface water, mixtures of industrial wastes or other wastes as may be present.

18. *Solid Waste.* Any garbage, refuse, rubbish, special solid waste, other waste, or any combination thereof with insufficient liquid content to be free flowing.

19. *Special Solid Waste*. Hazardous wastes, radioactive wastes, agricultural wastes, industrial wastes or sludges, and sewage residue.

Landscaping Definitions.

1. *Conifer; Coniferous*. A woody plant, usually evergreen, with cones and needle-shaped or scale-like leaves.

2. *Exotic Plant Species*. A plant species that has evolved in a country or region other than Oakland County, Michigan, and has been introduced by human activity.

3. *Exotic Invasive Plant Species*. An exotic plant species that has no natural controls and is able to out-compete and gradually displace native plants.

4. *Herbaceous*. Refers to a plant with little or no woody tissue that often dies back to its roots each year during winter.

5. *Native Plant Species*. A native plant species is one that has naturally evolved over thousands of years under certain soil, hydrologic, and other site conditions. Where “native plant species” is used in the text, this means a straight species, not a cultivar of a species.

Large-Format Retail. A singular retail or wholesale user, who occupies no less than 70,000 square feet of gross floor area, typically requires high parking to building area ratios and has a regional sales market. Regional retail/wholesale uses can include, but are not limited to, membership warehouse clubs that emphasize bulk sales, discount stores, and department stores.

Lighting Definitions.

1. *Canopy Structure.* Any overhead protective structure which is either extended from a building or free-standing, including an awning.

2. *Foot-candle.* A standard unit, established as a reference, and used when measuring the quantity of light. A foot-candle equals the total intensity of light that falls upon a one square foot surface that is placed one (1) foot away from one (1) lit candle.

3. *Glare.* Light that is misdirected into the eye of potential observers or passer-by, potentially impairing their ability to see clearly and compromising public safety and welfare.

4. *Lamp.* The component of the luminaire that produces the actual light, including luminous tube lighting.

5. *Light Fixture.* The assembly that holds a lamp and may include an assembly housing, a mounting bracket or pole socket, a lamp holder, a ballast, a reflector or mirror, and a refractor or lens. A light fixture also includes the assembly for luminous tube and fluorescent lighting.

6. *Light Pollution.* Electric light which may impact the safety and welfare of travelers by impairing their ability to see potential hazards effectively, reduces the enjoyment of the night sky, causes undesirable glare, unnecessary illumination of adjacent properties or causes a detrimental effect on the environment.

7. *Light Trespass.* The shining of light produced by a luminaire beyond the boundaries of the property on which it is located.

8. *Luminaire.* The complete lighting system including the lamp and light fixture.

9. *Luminous Tube Lighting.* Gas-filled tubing which, when subjected to high voltage, becomes luminescent in a color characteristic of the particular gas used, e.g., neon, argon, etc.

10. *Photometric Grid* or *Study.* A graphic illustration of the initial horizontal illuminance of proposed lighting calculated at grade using a grid of points no more than ten feet apart and covering the entire site (excluding buildings) and extending a minimum of ten feet beyond the lot or parcel property line.

11. *Shielded Fixture.* An outdoor light fixture shielded or constructed in a manner such that its light does not project beyond a certain limit. A lumi-

naire mounted in a recessed fashion under a canopy or other structure such that the surrounding structure effectively shields the light in the same manner is also considered fully shielded for the purposes of this ordinance. Shielded fixtures shall be specified and installed properly to restrict light spillage past the property line.

12. *Spill Light.* Light that is misdirected and illuminates an object or area that is not intended to be illuminated.

13. *Useful Light.* Light that is directed to illuminate an object or area for a useful purpose.

Loading Space. An off-street space on the same lot with a building or group of buildings, for temporary parking of a commercial vehicle while loading and/or unloading merchandise or materials.

Lodging Facility. Any establishment in which individual units are rented to transients for periods of less than thirty (30) days for the purpose of sleeping. The term shall include hotels and motels but shall not include bed-and-breakfasts operations, multiple-family dwellings, or rooming houses.

Lot. A parcel of land, excluding any portion in a road or other right-of-way,. Such lot may consist of:

1. A single lot of record;

2. A portion of a lot of record;

3. Any combination of complete and/or portions of lots of record; or

4. A parcel of land described by metes and bounds.

Lot Area, Gross. The net lot area plus any public road right-of-way or private road easement contained within the property boundary.

Lot Area, Net. The total horizontal area within the lot lines of the lot, exclusive of any public road rights-of-way or private road easements. Net lot area shall be used to determine compliance with minimum lot area requirements.

Lot, Corner. A lot where the interior angle of two (2) adjacent sides at the intersection of two (2) streets is less than one hundred and thirty-five (135) degrees (See Figure 4). A lot abutting upon a curved street or streets shall be considered a corner lot for the purposes of this Ordinance if the arc is of less radius than one hundred and fifty (150) feet and the tangents to the curve, at the two (2) points where the lot lines meet the curve or the straight street line extended, form an interior angle of less than one hundred and thirty-five (135) degrees.

Figure 4

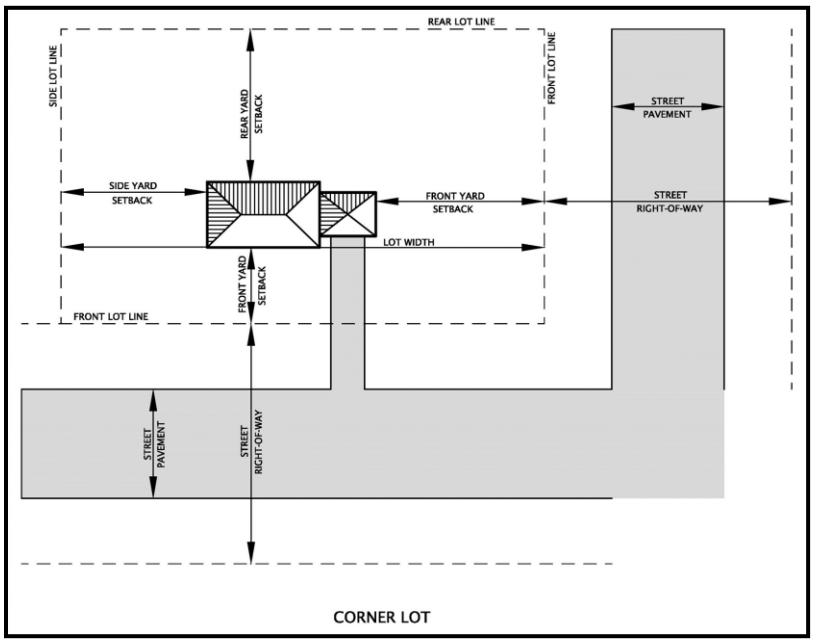

Lot Coverage. That percentage of the net lot area covered by the building area.

Lot Depth. The horizontal distance between the midpoint of the front lot line and the midpoint of the rear lot line.

Lot, Double Frontage or *Through Lot.* A lot other than a corner lot having frontage on two (2) more or less parallel streets. In the case of a row of double frontage lots, one street will be designated as the front street for all lots in the plat and in the request for a zoning compliance permit. If there are existing structures in the same block fronting one or both of the streets, the required front yard setback shall be observed on those streets where structures presently front (See Figure 5).

Lot, Interior. An interior lot is a lot other than a corner lot with only one (1) lot line fronting on a street.

Lot, Lakefront. See *Lot, Waterfront.*

Lot Lines. Any line dividing one lot from another or from a right-of-way, and thus constitutes the property lines bounding a lot.

Lot Line, Front. In the case of an interior lot, abutting upon one (1) public or private street, the front lot line shall mean the line separating the lot from such street right-of-way. In the case of corner or double frontage lots, the front lot line shall be that line separating said lot from that street which is designated as the front street in the plat and/or in the request for a zoning compliance permit (see *Lot, Double Frontage*), subject to the approval of the Planning Commission.

Figure 5

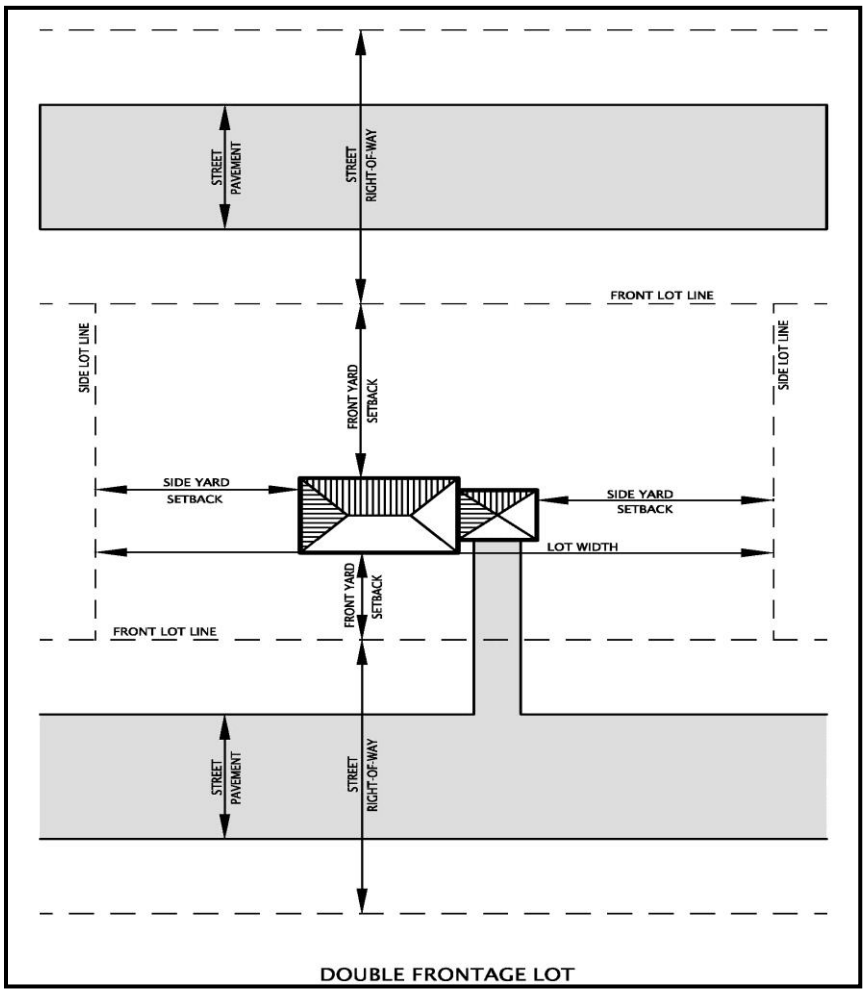

Lot Line, Rear. Ordinarily, that lot line which is opposite and most distant from the front lot line of the lot. In the case of an irregular or triangular shaped lot, a line ten (10) feet in length entirely within the lot parallel to and at the maximum distance from the front lot line of the lot shall be considered to be the rear lot line for the purpose of determining depth of rear yard. In cases where none of these definitions is applicable, the planning commission shall designate the rear lot line (see Lot, Double Frontage).

Lot Line, Side. Any lot line other than the front lot line or rear lot line. In the case of a corner lot, however, all lot lines which abut a public or private road right of way shall be considered front lot lines.

Lot of Record. A lot, the dimensions of which are shown on a map recorded in the office of the register of deeds for Oakland County, or a lot or parcel described by metes and bounds, the accuracy of which is attested to by a professional engineer or registered surveyor, so designed by the State of Michigan, and said description so recorded or on file with the county.

Lot, Waterfront. Any lot which is abutting a lake or other watercourse. The water side of such a lot shall be considered a rear yard.

Lot Width. In the case of parallel side lot lines, lot width shall be the horizontal distance between the side lot lines, measured at the building line. Where the side lot lines are not parallel, lot width shall be the length of a straight line perpendicular to the lot axis, measured where the lot axis crosses the building line. The lot axis shall be a straight line joining the midpoints of the front and rear lot lines, (see Figure 6).

Figure 6 – Lot Width

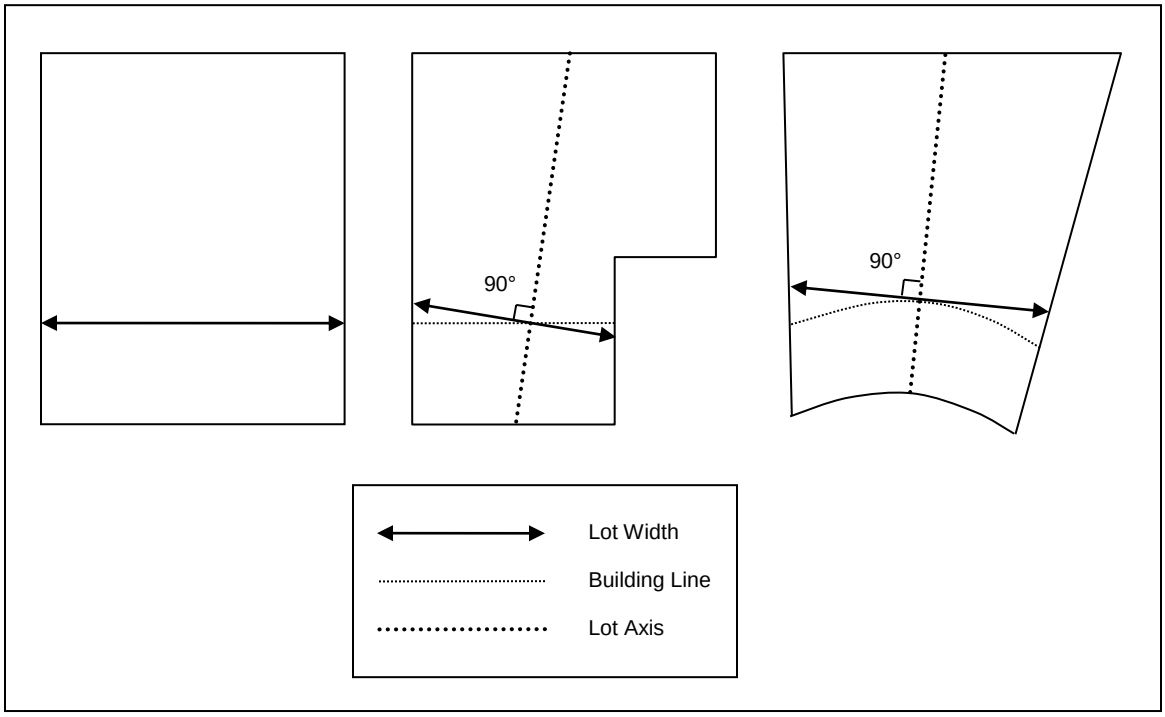

Lot, Zoning. A single tract of land, located within a single block which, at the time of applying for a building permit, is designated by its owner or developer as a tract to be used, developed, or built upon as a unit, under single ownership or control and which tract satisfies the applicable requirements of this Ordinance in every respect. A zoning lot may, therefore, not coincide with a lot of record, but may include one (1) or more lots of record.

Major Thoroughfare. A paved arterial street which is designated as a County Primary Road by the Road Commission for Oakland County.

Master Plan. The Plan prepared and adopted by the Township Planning Commission in accordance with Public Act 168 of 1959, as amended, consisting of graphic and written materials which indicate the Township's desired arrangement of land uses and future development.

Mini-Warehouse or *Self-Storage Facility.* A building or group of buildings, each of which contains several individual storage units, each with a separate door and lock and which can be leased on an individual basis.

Manufactured Housing Unit or Mobile Home. A dwelling unit manufactured in one (1) or more sections, designed for year-round, temporary or transient dwelling purposes, capable of being transported upon its own or a separate wheeled chassis, not motorized or self-propelled, built for the purpose of being located in a licensed manufactured housing community or mobile home park, meets the requirements of the FHA Standards of the United States Department of Housing and Urban Development (HUD) or the American National Standards Institute (ANSI), if built prior to 1976**.** Such dwellings do not include recreational vehicles such as travel trailers, motor coaches, campers and the like.

Manufactured Housing Community or Mobile Home Park. A specifically designated parcel of land constructed and designed to accommodate three (3) or more manufactured housing units for residential dwelling use, and licensed by the State of Michigan in accordance with Act No. 96 of the Public Acts of Michigan of 1987 (MCL 125.2301 et seq., MSA 19.855(101) et seq.), the Mobile Home Commission Act.

Mezzanine. An intermediate level or levels between the floor and ceiling of any story with an aggregate floor area not more than one-third of the area of the room or space in which the level of levels are located.

Motel. A business comprised of a dwelling unit or a group of dwelling units so arranged as to furnish overnight lodging accommodations for transient guests, open to the traveling public for compensation.

Natural Resources. Natural Resources shall include land, soils, wetlands, floodplains, surface and groundwater, topography, trees and other types of vegetative cover, subsurface strata, geological formations, animal life, and naturally-occurring substances and living organisms that can be useful to people. Natural resources are of two types: renewable (e.g., plants and trees) and nonrenewable (e.g. mineral resources). Natural resources may also be referred to as “natural features” in this Ordinance.

Nonconforming Building or Structure,. A building, structure, or portion thereof lawfully existing at the effective date of this Ordinance, or amendments thereto, and which does not conform to the provisions of the Ordinance in the zoning district in which it is located.

Nonconforming Lot,. A lot that was lawfully created at the effective date of this Ordinance, or amendments thereto, and that does not conform to the lot requirements of the zoning district in which it is located.

Nonconforming Use. A use which lawfully occupied a building or land at the effective date of this Ordinance, or amendments thereto, and that does not conform to the use regulations of the zoning district in which it is located.

Non-residential Uses. Shall mean commercial, industrial, office and other non-residential uses which may or may not be allowed in residential zoning districts. This can also include schools, country clubs, churches and other institutional uses.

Nuisance. An offensive, annoying, unpleasant or obnoxious thing or practice, a cause or source of annoyance, especially a continuing or repeating invasion of any physical characteristics of activity or use across a property line which can be perceived by or adversely affect a human being.

Nursery, Plant Material. A space, building, and/or structure, or any combination thereof, where live trees, shrubs, and other plants used for gardening and landscaping are propagated, stored, and/or offered for sale on the premises, but not including any space, building or structure used for the sale of fruits, vegetables or Christmas trees.

Nursing Home. See *Convalescent Home*.

Occupied. The word "occupied" includes arranged, designed, built, altered, converted to, rented or leased, or intended to be inhabited; not necessarily for dwelling purposes.

Off-Street Parking Lot. A facility providing vehicular parking spaces along with adequate drives and aisles. Adequate maneuvering space shall be provided which allows unrestricted ingress and egress plus on-site parking space for more than three (3) vehicles.

Open-Air Business Uses. A business use operated for profit, usually without buildings or structures, including uses such as the following:

1. Bicycle, utility truck or trailer, motor vehicle, boats or home equipment sale or rental services.

2. Outdoor display and sales of garages, motor homes, mobile homes, snowmobiles, farm implements, swimming pools and similar products.

3. Retail sale of trees, fruit, vegetables, shrubbery, plants, seeds, topsoil, humus, fertilizer.

4. Tennis courts, archery courts, shuffleboard courts, horseshoe pits, rifle ranges, miniature golf courses, golf driving ranges, children's amusement parks or similar recreation uses (transient or permanent).

Open Space. Any parcel or area of land or water that is generally free of structures and that is set aside, dedicated, designated or reserved for public or private use or enjoyment or for the use and enjoyment of owners and occupants of land adjoining or neighboring such open space. Open space may be required for recreation, conservation, aesthetic, or other purposes.

Open Space Uses. Any principal or accessory use of a lot or parcel not involving the use of buildings or structures which are required to meet the Building Code or any construction requirement of the Township Ordinances, rules or regulations, except as provided in this Ordinance.

Open Storage. All outdoor storage of building materials, sand, gravel, stone, lumber, equipment, and other supplies.

Ordinary High-Water Mark. The line between upland and bottomland which persists through successive changes in water levels, below which the presence and action of the water is so common or recurrent that the character of the land is distinguished from the upland as evidenced in the soil, the configuration of the surface of the soil and vegetation.

Owner. The person or persons, firm, or corporation having legal or equitable title to a lot or parcel of land, or their lessees or agents with respect to such land.

Parcel. A piece of land created by a partition, subdivision, deed, or other instrument recorded with the appropriate recorder. This includes a lot, lot of record, site condominium lot, or a piece of land created though other methods.

Parking Space. An area of definite length and width as designated in this Ordinance for parking an automobile or other vehicle, and which is fully accessible for such purposes.

Pawnshop. Any business that loans money on deposit of personal property or deals in the purchase or possession of personal property on condition of selling the same back again, or loans or advances money on personal property.

Pedestrian walkway. Any facility designed to safely move pedestrians that is physically separated from a public street or service drive. Pedestrian walkways may be open, covered, or enclosed and include such terms as "sidewalks" and "safety path."

Performance Guarantee. A cash deposit, certified check, or irrevocable bank letter of credit acceptable to the Township covering the estimated cost of improvements associated with a project for which Township approval is sought, deposited with the Township in order to insure faithful completion of the improvements.

Personal Service Establishment. A business where professional or personal services are provided for gain and where the retail sale of goods, wares, merchandise, articles or things is only accessory to the provision of such services, includ-

ing but not limited to barber shops, beauty shops, tailor shops, shoe repair shops and the like.

Pet. Only such animals as may commonly be housed within domestic living quarters.

Planned Unit Development. A special zoning district intended to permit mixed uses, flexibility and innovation in accordance with Article 14 of this Ordinance.

Planned Unit Development Agreement. A written agreement between a developer and the Township which specifies the terms and conditions of Planning Unit Development pursuant to Article 14 of this ordinance.

Planning Commission. The Planning Commission of Charter Township of Oxford, Oakland County, Michigan.

Pond. A small body of surface water more than one quarter (¼) of an acre but less than five (5) acres which exists in a natural state or is established by either the damming of surface water or by excavation of soil to expose groundwater.

Porch, Enclosed. A covered entrance to a building or structure which is totally enclosed, and projects out from the main wall of such building or structure and has either a separate roof or a roof that is integral with that of the principal building or structure to which it is attached.

Porch, Open. A covered entrance to a building or structure which is unenclosed except for columns supporting the porch roof, and projects out from the main wall of said building or structure and has either a separate roof or a roof that is integral with that of the principal building or structure to which it is attached.

Principal Building. The building in which is conducted the principal use of the lot on which it is located. Lots with multiple principal uses may have multiple principal buildings, but storage buildings, garages, and other clearly accessory uses shall not be considered principal buildings.

Private Driveway. Shall mean any piece of privately-owned and maintained property which is used for access by vehicular traffic to a single parcel of private property but is not open or normally used by the public.

Public Utility. Any person, firm, corporation, municipal department, board or commission duly authorized to furnish and furnishing, and under federal, state or municipal regulations, to the public; electricity, gas, steam, communications, telegraph, transportation or water. A public utility shall not however include cellular telephone operations.

Recreational Vehicle. These uses shall be defined as follows:

1. *Travel Trailer.* A portable vehicle on a chassis, not exceeding thirty-six (36) feet in length or nine (9) feet in width, which is designed to be used as a temporary dwelling during travel, recreational, and vacation uses, and which may be identified as a "travel trailer" by the manufacturer. Travel trailers generally contain sanitary, water, and electrical facilities.

2. *Motor Home.* A recreational vehicle intended for temporary human habitation, sleeping and/or eating, mounted upon a chassis with wheels and capable of being moved from place-to-place under its own power. Motor homes generally contain sanitary, water, and electrical facilities.

3. *Pickup Camper.* A structure designed to be mounted on a pickup or truck chassis with sufficient equipment to render it suitable for use as a temporary dwelling during the process of travel, recreational, and vacation uses.

4. *Folding Tent Trailer.* A canvas folding structure mounted on wheels and designed for travel and vacation use.

5. *Boats and Boat Trailers.* Includes boats, floats, rafts, canoes, plus the normal equipment to transport them on the highway.

6. *Other Recreational Equipment.* Includes snowmobiles, all-terrain or special terrain vehicles, utility trailers, plus the normal equipment to transport them on the highway.

Recreational Vehicle Park (RV Park). A recreation-oriented facility for the overnight or short-term parking of travel trailers, recreation vehicles or tents, but not including mobile homes. May also be known as a campground.

Refuse. All rubbish, refuse, waste material, and garbage, including, but not limited to, the following: waste composed of animal, fish, fowl, fruit or vegetable matter, dead animals, putrescible and solid waste (except body wastes), ashes, glass, cans, bottles, discarded or abandoned machinery, household appliances, industrial wastes, discarded, inoperative, dismantled or partially dismantled motorized vehicles or parts thereof.

Restaurant. Any establishment whose principal business is the sale of food and beverages to the customer in a ready-to-consume state, and whose method of operation is characteristic of a carry-out, drive-in, drive-through, fast food, sit-down restaurant, bar/lounge, combination thereof, as defined below.

1. *Carry-Out Restaurant.* Any restaurant whose method of operation involves sale of food, beverages and/or frozen desserts in disposable or edible containers or wrappers in a ready-to-consume state for consumption primarily off the premises.

2. *Drive-In Restaurant.* Any restaurant designed to permit or facilitate the serving of meals, sandwiches, ice cream, beverages or other food served

directly to, or permitted to be consumed by, patrons in cars or other vehicles parked on the premises, or permitted to be consumed by patrons elsewhere on the site outside the main building.

3. *Drive-Through or Drive-Thru Restaurant.* Any restaurant whose method of operation involves the delivery of prepared food to the customer in a motor vehicle, typically through a drive-through window, for consumption off of the premises.

4. *Fast-Food Restaurant.* Any restaurant whose method of operation involves minimum waiting for delivery of ready-to-consume food to the customer at a counter or cafeteria line for consumption at the counter where it is served, or at tables, booths, or stands inside or outside of the structure, or for consumption off the premises, but not in a motor vehicle at the site.

5. *Sit-Down Restaurant.* Any restaurant whose method of operation involves either the delivery of prepared food by waiters and waitresses to customers seated at tables within a completely enclosed building, or the prepared food is acquired by customers at a cafeteria line and is subsequently consumed by the customers at tables within a completely enclosed building.

6. *Bar/Lounge.* Any restaurant that is operated primarily for the dispensing of alcoholic beverages, although the sale of prepared food or snacks may also be permitted. If a bar or lounge is part of a larger dining facility, it shall be defined as that part of the structure so designated or operated.

Right-of-Way. A road, street, alley, or other thoroughfare or easement permanently established for passage of persons or vehicles.

Road, County Primary. A public road designated as a primary road by the Road Commission for Oakland County.

Road or Street. Any public or private thoroughfare or right-of-way, other than a public or private alley, parking lot, or driveway, dedicated to or designed for travel and access to any land, lot or parcel whether designated as a thoroughfare, road, avenue, highway, drive, land, place, court, or any similar designation.

Road, Private. Any road which is to be privately maintained and has not been accepted for maintenance by the Road Commission for Oakland County, the State of Michigan or the federal government**.**

Road, Public. Any road which has been dedicated to and accepted for maintenance by the Road Commission for Oakland County, the State of Michigan or the federal government.

Road Right-of-Way Line. The line which forms the outer limits of a road right-of-way or easement, and which forms the line from which all front setbacks and yards are measured~~,~~ unless otherwise specified in this Ordinance.

Roadside Stand. A temporary or existing permanent structure containing not more than two hundred (200) square feet of enclosed floor area and operating for the purpose of selling agricultural, dairy or poultry products raised or produced only by the proprietor of the stand or by his family.

Rooming House. A building where lodging only is provided for compensation.

Safety Path. A non-motorized, pedestrian pathway, as regulated under Ordinance No. 117.

Secondary Access Drive. A road that is generally parallel to and adjacent to an arterial road and that is designed to provide access to abutting properties so that these properties are separated from the through traffic on the arterial road and so that the flow of traffic on the arterial road is not impeded by direct driveway access from a large number of abutting properties.

Service Drives. Internal private streets and drives providing ingress to, egress from, access or circulation within a development. Service drives may include such terms as loading drives, internal drives and the like.

Setback. The minimum horizontal required distance measured from a front, side, or rear lot line. The required setback area is that area encompassed by the respective lot lines and setback lines.

Shopping Center. More than one (1) commercial establishment, planned, developed, and managed as a unit, with off-street parking provided on the property.

Signage Definitions.

1. *Animated Sign* (See *Flashing Sign*). Any sign that uses movement or change of lighting to depict or create a special effect or scene. This definition shall not include electronic signs displaying only time, temperature and stock market information.

2. *Awning Sign.* (See *Canopy Sign*). A sign which is printed or otherwise affixed to an awning which may be rolled or folded up against the wall to which it is attached.

3. *Balloon Sign.* Any air or gas-filled object used as a temporary sign to direct attention to any business or profession , or to a commodity or service sold, offered or manufactured, or to any festival or entertainment.

4. *Banner Sign.* Temporary signs produced on cloth, paper, fabric or other natural or synthetic material of any kind, with or without frames. National, state or municipal flags or the official flag of any institution or business shall not be considered banners.

5. *Billboard.* A surface whereon advertising matter is set in view conspicuously and which advertising does not apply to premises or any use of premises wherein it is displayed or posted (an off-site sign) and is regulated in accordance with regulations governed by the Highway Advertising Act, P.A. 106 of 1972 as amended.

6. *Business Sign.* An accessory sign related to the business, activity or service conducted on the premises upon which the sign is placed.

7. *Canopy Sign* (See *Awning Sign*). Any sign that is a part of or attached to an awning, canopy, or other fabric, plastic, or structural protective cover over a door, entrance, window, or outdoor service area. A marquee is not a canopy.

8. *Changeable Copy Sign.* A sign or portion thereof with characters, letters, or illustrations that can be changed or rearranged without altering the structural integrity of the sign. A sign on which the message changes more than eight times per day shall be considered an animated sign and not a changeable copy sign for purposes of this ordinance. A sign on which the only copy that changes is an electronic or mechanical indication of time, temperature or stock market information shall be considered a "time, temperature and stock market" portion of a sign and not a changeable copy sign for purposes of this ordinance.

9. *Commercial Message*. Any sign wording, logo or other representation that, directly or indirectly, names, advertises or calls attention to a business, product, service, or other commercial activity.

10. *Construction Sign*. A temporary sign that bears the names and addresses of the project, contractors, architects, developers, planners, financial institutions, or engineers engaged in the construction project.

11. *Development Entranceway Sign*. A sign, depicting the name of a residential, office, or industrial development, including, but not limited to, residential, office or industrial subdivisions or condominium subdivisions, apartment complexes, senior housing complexes, and mobile home parks, located at the entrance of such development.

12. *Flag.* Any fabric, banner, or bunting containing distinctive colors, patterns, or symbols, used as a symbol of a government, political subdivision, corporation, or other entity.

13. *Flashing Sign* (See *Animated Sign*)**.** Any sign, which, by method or manner of illumination, flashes on or off, winks, or blinks with varying light intensity, shows motion, or creates the illusion of motion or revolves in a manner to create the illusion of being on or off.

14. *Freestanding Or Ground Sign.* A sign supported directly by the ground or with support provided by uprights, braces, pylons or poles anchored in the ground that are independent from any building or other structure. For purposes of this ordinance, freestanding or ground signs shall include: billboards, incidental signs, monolith, subdivision entranceway, and business signs.

15. *Illuminated Sign.* A sign illuminated in any manner by an artificial light source.

16. *Incidental Sign.* A sign, generally informational, that has a purpose secondary to the use of the lot on which it is located, such as "no parking", "loading only", "telephone", and similar directives. No sign with a commercial message legible from a position off the lot on which the sign is located shall be considered incidental.

17. *Integral Sign.* A sign that may contain the name of the building, date of erection, or take the form of a monumental citation or commemorative tablet. The sign is often carved into stone, concrete or similar material or made of bronze, aluminum or other permanent type construction and made an integral part of the structure.

18. *Marquee.* Any permanent roof-like structure projecting beyond a building or extending along and projecting beyond the wall of the building, generally designed and constructed to provide protection from the weather.

19. *Marquee Sign.* Any sign attached to, in any manner, or made a part of a marquee.

20. *Monolith Sign.* A three-dimensional, self-supporting, base-mounted, freestanding sign, consisting of two (2) or more sides extending up from the base, and upon which a message is painted or posted. A monolith sign may also consist of a base-mounted cylindrical structure upon which a message is painted or posted.

21. *Neon Sign.* A sign consisting of visible glass tubing, filled with neon gas, which glows when electric current is sent through it.

22. *Non-Conforming Sign.* Signs which are prohibited under the terms of this Ordinance but were in use and lawful prior to the enactment of this Ordinance, or subsequent amendment thereof that enacted the prohibition.

23. *Obsolete Sign.* Signs that advertise a product that is no longer made or that advertise a business that has closed.

24. *Off-Premises Sign.* See Billboard.

25. *Pennant Sign.* A sign or display consisting of long, narrow, usually triangular flags of lightweight plastic, fabric, or other materials, that may or may not contain a message, suspended from a rope, wire, or string, usually in series, designed to move in the wind.

26. *Political Sign.* A temporary sign relating to the election of a person to public office or relating to a political party or relating to a matter to be voted upon at an election called by a public body.

27. *Portable Sign.* A temporary sign which is not permanently affixed to a building face or to a pole, pylon, or other support that is permanently anchored in the ground. A portable sign is capable of being moved from one location to another. Portable signs include, but are not limited to: signs designed to be transported by means of wheels; signs converted to A- or T- frames; menu and sandwich board signs; balloons used as signs; and signs attached to or painted on vehicles parked and visible from the public right-of-way, unless said vehicle is used in the normal day-to-day operations of the business.

28. *Projecting Sign.* Any sign affixed to a building or wall in such a manner that its leading edge extends beyond the surface of the building or wall. The nominal projection (up to two (2) inches) of wall signage affixed flat upon a wall surface shall not be construed as a projecting sign.

29. *Real Estate Sign.* A temporary sign placed upon property for the purpose of advertising to the public the sale or lease of said property.

30. *Roof Sign.* Any sign erected and constructed wholly on and over the roof of a building, and supported by the roof structure.

31. *Sandwich Sign.* A temporary, portable sign consisting of two advertising boards laid back-to-back and at least partially supported by each other.

32. *Sign.* The display of any words, numerals, figures, devices, designs or trademarks to make known an individual, firm, profession, business, product or message and which is visible to the general public.

33. *Street Furniture Sign.* A sign structure which by its design invites, entices, encourages or makes itself convenient or available to use by the general public for something more than mere visual attraction to its message.

Street furniture signs include but are not limited to signage on benches and on table umbrellas used for outdoor, cafe-style dining.

34. *Suspended Sign.* A sign that is suspended from the underside of a horizontal plane surface and is supported by such surface.

35. *Temporary Sign.* A sign which is used only temporarily and advertises a private or public seasonal or special event, function or sale. Temporary signs are not permanently mounted. For purposes of this ordinance, temporary signs shall include: balloon, banner, construction, political, portable and real estate signs.

36. *Wall Sign.* A sign fastened to or painted on the wall area of a building or structure that is confined within the limits of the wall with the exposed face of the sign in a plane approximately parallel to the plane of such wall.

37. *Window Sign.* Any sign that is placed inside a window or upon the window panes or glass and is visible from the exterior of the window.

Site Plan. A plan showing all relevant features of a proposed development, so that it may be evaluated in order to determine whether it meets the provisions of this Ordinance.

Special Land Use or Special Use. A use which is subject to special land use approval by the Planning Commission. A special land use may be granted only when there is a specific provision in this Ordinance. A special land use is not considered to be a nonconforming use.

Stable, Private. An accessory building for the keeping of horses for non-commercial use of the residents of the principal building on the lot.

State Construction Code or Building Code. The latest edition of the Michigan Building Code adopted by the State of Michigan in R408.30401 of the Michigan Administrative Code.

Story. That portion of a building, other than a mezzanine, included between the surface of any floor and the floor next above it, or if there be no floor above it, then the space between the floor and the ceiling next above it.

Story, Mezzanine. See Mezzanine.

Story, Basement. For the purposes of this Ordinance, a basement shall be counted as a story if over fifty percent (50) of its height is above the level from which the height of the building is measured.

Story, One-Half. The story under the gable, hip or gambrel roof, the wall plates of which on at least two (2) opposite exterior walls are not more than two (2) feet

above the floor of such story and the floor area shall not exceed two-thirds (2/3) of the area of the floor below.

Story Height. The vertical distance from the top surface of one floor to the top surface of the next above. The height of the top most story is the distance from the top surface of the floor to the ceiling above it.

Structure. Any constructed or erected material, the use of which requires locations on the ground or attachment to something on the ground, including, but not limited to, buildings, towers, sheds, smokestacks, overhead transmission lines, fences and signs, but excluding walks, drives, pavements, and similar access or circulation facilities.

Structural Alterations. Any change in the supporting members of a building such as bearing walls, columns, beams or girders, or any substantial changes in the roof and exterior walls.

Substantial Portion. Substantial portion means a use or activity accounting for more than twenty (20) percent of any one (1) or more of the following: stock-in-trade, display space, floor space, or viewing time, movie display time, or entertainment time measured per month.

Swimming Pool. Any structure intended for swimming, recreational bathing or wading that contains water over twenty-four (24) inches deep. This includes in-ground, aboveground and on-ground pools; hot tubs; spas and fixed-in-place wading pools.

Township. Charter Township of Oxford, Oakland County, Michigan.

Township Board. The Supervisor, Clerk, Treasurer and Trustees of Charter Township of Oxford, Oakland County, Michigan.

Transition Zone. Any zoning district, arrangement of lots or land uses, landscaped area, or similar means used to provide a buffer between land uses or districts.

Travel Trailer. A vehicle, self-propelled or non self-propelled, so designed and constructed as to permit its being used as a conveyance on the public streets and duly licensable as such, and of a nature that will permit nonpermanent occupancy as a dwelling unit or rooming unit by one or more persons.

Unbuildable Land. Land encumbered by bodies of open water, streams, 100-year floodplains, and wetlands (as defined by Charter Township of Oxford Ordinance No. 80B).

Upland. The land area that lies above the ordinary high-water mark.

Use. The purpose for which land or premises or a structure or building thereon is designed, arranged, intended or for which is occupied, maintained, let or leased.

Variance. A modification of the literal provisions of the Zoning Ordinance granted by the Zoning Board of Appeals in accordance with Article 17 of this ordinance.

Veterinary Hospital. See *Clinic, Veterinary*.

Wall. An obscuring structure of definite height and location, constructed of masonry, concrete or similar approved material.

Watercourse. As defined in the Charter Township of Oxford Wetlands & Watercourses Ordinance No. 80B, as amended.

Warehouse. A building used primarily for storage of goods and materials. See also *Distribution Center*.

Wetland. As defined in the Charter Township of Oxford Wetlands & Watercourses Ordinance No. 80B, as amended.

Wind Energy Conversion System (WECS). Any such device such as a wind charger, windmill, or wind turbine that converts wind energy into a form of electrical energy greater than one (1) kilowatt.

1. Agricultural WECS. Any WECS that is accessory to a permitted farm or agricultural operation, and is designed to serve the needs of the farm or agricultural operation.

2. Authorized Factory Representative. An individual with technical training of a WECS who has received factory installation instructions and is certified in writing by the manufacturer of the WECS.

3. Commercial WECS. Any WECS that is designed and built to provide electricity to the electric utility's power grid as an ongoing commercial enterprise and/or profit.

4. Facility Abandonment. Out of production for a period of time not less than one (1) year.

5. Manual and Automatic Controls. Gives protection to power grids and limit rotation of WECS blades to below the designed limits of the conversion system.

6. Private WECS. Any WECS that is accessory to a principal non-farm, non-agricultural use located on the same lot, and is designed and built to serve the needs of the principal use which may provide some electricity back to the power grid when needs of the principal use are exceeded.

7. Professional Engineer. Any licensed engineer registered in the State of Michigan.

8. Temporary WECS. Any WECS not permanently affixed to a structure or the ground and will serve a need for no more than 365 days.

9. Utility Scale. All wind farms that are rated to produce greater than fifty (50) kilowatts of energy.

Wireless Communication Facilities. Includes all structures and accessory facilities relating to the use of the radio frequency spectrum for the purpose of transmitting or receiving radio signals. This may include, but shall not be limited to, radio towers, television towers, telephone devices and exchanges, microwave relay towers, telephone transmission equipment buildings and commercial mobile radio service facilities. Not included within this definition are citizen band radio facilities, short wave facilities, ham amateur radio facilities, satellite dishes, and governmental facilities which may be subject to state or federal law or regulations which preempt municipal regulatory authority. For purposes of this Ordinance, the following additional terms are defined:

1. Wireless Communications Facilities, Attached. Wireless communication facilities that are affixed to existing structures, such as existing buildings, towers, water tanks, utility poles, and the like. A wireless communication support structure proposed to be newly established shall not be included within this definition.

2. Wireless Communication Support Structures. Structures erected or modified to support wireless communication antennas. Support structures within this definition include, but shall not be limited to, monopoles, lattice towers, light poles, wood poles and guyed towers, or other structures which appear to be something other than a mere support structure.

3. Collocation. The location by two (2) or more cellular communication providers of cellular communication facilities on a common structure, tower or building

Yard. A general term applied to the space on a lot or parcel, which lot or parcel contains a building or group of buildings, lying between the building or group of buildings and the nearest respective lot or property line facing each building.

Yard, Front. A required front yard is an open space extending the full width of a lot and of a uniform depth (setback) measured horizontally at right angles to the front lot line and unoccupied from the ground upward except as hereinafter specified (see Figure 7).

Yard, Rear. A required rear yard is an open space extending the full width of a lot and of a uniform depth (setback) measured horizontally at right angles to the

rear lot line and unoccupied from the ground upward as herein otherwise specified (see Figure 7).

Yard, Required. An open space of prescribed width or depth adjacent to a lot or property line on the same land with a building or group of buildings, which open space lies in the area between the building or group of buildings and the nearest lot line and is unoccupied and unobstructed from the ground upward, except as otherwise provided herein.

Yard, Side. A required side yard is an open space extending from the front to the rear yard and of a uniform width (setback) measured horizontally at right angles to the side lot line; and unoccupied from the ground upward except as herein otherwise specified (see Figure 7).

Figure 7

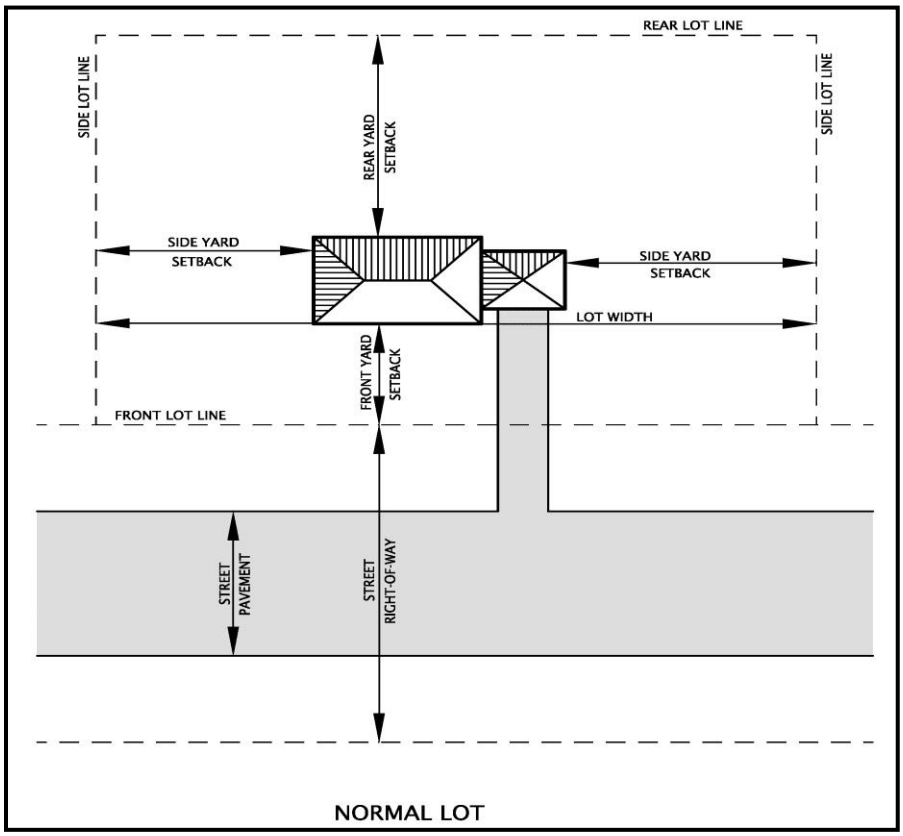

Zoning Administrator or Enforcement Officer. The person appointed by the Township Board to administer and enforce the standards of this Ordinance.

Zoning Compliance Permit. A permit issued by the Zoning Administrator or Enforcement Officer prior to construction, enlargement or alterations of property in accordance with Section 16.3 of this Ordinance.

ARTICLE 3
ZONING DISTRICT REGULATIONS

3.1 Establishment of Zoning Districts. For the purposes of this Ordinance, Oxford Charter Township is hereby divided into the following districts:

AG	Agriculture (20 acres)
SF-3	Suburban Farms (10 acres)
SF-2	Suburban Farms (5 acres)
SF-1	Suburban Farms (2.5 acres)
R-3	Single-Family Residential (1 acre)
R-2	Single-Family Residential (25,000 sq. ft.)
R-1	Single-Family Residential (12,000 sq. ft.)
R-1A	Single-Family Residential (6,000 sq. ft.)
RM	Multi-Family Residential
MHC	Manufactured Housing Community
C-1	Local Commercial
C-2	General Commercial
O	Office
RO	Research-Office
I-1	Light Industrial
I-2	General Industrial
R	Recreation
G	Gravel and Sand Overlay

3.2 Official Zoning Map.

A. Identification. The zoning districts as provided in Section 3.1 are bounded and defined as shown on the map entitled "Zoning District Map of the Charter Township of Oxford." The Zoning District Map, along with all notations, references, and other information shown thereon shall accompany and be made a part of this Ordinance.

B. Authority. Regardless of the existence of purported copies of the Zoning District Map, which may be published, a true and current copy of the Zoning District Map available for public inspection shall be located in and maintained by the Office of the Township Clerk. The Clerk's copy shall be the final authority as to the current zoning status of any land, parcel, lot, district, use, building, or structure in the Township.

C. Interpreting Zoning District Boundaries. Where uncertainty exists with respect to the boundaries of any of the districts indicated on the Zoning District Map, the following rules shall apply:

1. A boundary indicated as approximately following the centerline of a highway, alley, or easement shall be construed as following such centerline.

2. A boundary indicated approximately following a recorded lot line or the line bounding a parcel shall be construed as following such line.

3. A boundary indicated as approximately following a municipal boundary line of a city, village, or township shall be construed as following such line.

4. A boundary indicated as following a railroad line shall be construed as being located midway in the right-of-way.

5. A boundary indicated as following a shoreline shall be construed as following such shoreline, and in the event of change in the shoreline shall be construed as moving with the actual shoreline.

6. A boundary indicated as following the centerline of a stream or river, canal, lake or other body of water shall be construed as following such centerline.

7. A boundary indicated as parallel to, or an extension of, features in items (1) through (6) preceding shall be so construed.

8. A distance not specifically indicated on the Official Zoning Map shall be determined by the scale of the map.

9. Where a physical or cultural feature existing on the ground is at variance with that shown on the Official Zoning District Map or any other circumstances not covered by items (1) through (8) preceding, the Zoning Board of Appeals shall interpret the location of the zoning district boundary.

D. Amendment. In accordance with the provisions of this Ordinance and Michigan Public Act 110 of 2006, as amended, changes made in district boundaries and other matters portrayed on the Zoning District Map shall be entered on the Zoning District Map after the amendment has been approved by the Township Board and has taken effect pursuant to Michigan Public Act 110 of 2006, as amended. No changes shall be made to the Zoning District Map except in conformity with the provision of Article 18.

3.3 Application of Zoning District Regulations. The regulations herein established within each zoning district shall be the minimum regulations for promoting and protecting the public health, safety, and general welfare and shall be uniform for each class of land, buildings, structure, or uses throughout each district. Wherever the requirements of this Ordinance are at variance with the requirements of any other adopted rules or regulations, ordinances, deed restrictions, or

covenants, the most restrictive or those imposing the higher standards shall govern. Except as hereinafter provided, district regulations shall be applied in the following manner:

A. No building shall hereafter be erected, altered, or moved, nor shall any building or premises hereafter be used for any purpose other than is permitted in the district in which said building or premises is located, subject to the following:

1. Permitted Uses. Uses shall be permitted by right only if specifically listed as principal permitted uses in the various zoning districts or are similar to such listed uses. All other uses not listed are prohibited.

2. Accessory Uses and Buildings. Accessory uses and buildings are permitted only if such uses are clearly incidental to the permitted principal uses.

3. Special Land Uses. Special land uses may be permitted as listed or if similar in density, intensity, traffic generation or environmental impact to the listed special uses.

B. No building shall hereafter be erected or altered which

1. Deviates from any of the requirements of Section 3.7, Schedule of District Regulations, for the district in which such building is located.

2. Exceeds the height limit specified for the district in which such building is located.

3. Occupies a greater percentage of lot area than is specified for the district in which such building is located.

4. Intrudes upon the required front, rear, or side yards, as specified for the district in which such building is located.

5. Accommodates or houses a greater number of families than is specified for the district in which such building is located.

6. Provides less living space per dwelling unit than is specified for the district in which such building is located.

C. No lot area shall be so reduced or diminished that yards and other open spaces shall be smaller than specified, nor shall the density of lots or units be increased in any manner except in conformity with the area regulations, nor shall the area of any lot be reduced below the minimum requirements herein established for the district in which such lot is located.

D. No part of a yard or other open space required for any building for the purposes of compliance with the provisions of this Ordinance shall be included as a part of a yard or other open space similarly required for another building.

E. Every building erected, altered, or moved shall be located on a lot of record as defined herein, and except in the case of approved multiple dwelling, commercial, office and industrial developments, there shall be no more than (1) principal building and its permitted accessory structures located on each lot in any district.

F. Whenever any street, alley or other public way within the Charter Township of Oxford shall have been vacated by official governmental action or operation of law and when the lands within the boundaries thereof attach to and become a part of lands adjoining such street, alley, or public right-of-way, such lands shall automatically and without further governmental action thenceforth acquire and be subjected to the same zoning regulations as are applicable to lands to which same shall attach, and the same shall be used for the same use as is permitted under this Ordinance for such adjoining lands.

G. Whenever any fill is placed in any lake or stream, the land thus created shall automatically and without further governmental action thenceforth acquire and be subjected to the same zoning regulations as are applicable to lands to which the same shall attach or be adjacent, and the same shall be used for the same purposes as are permitted under this Ordinance for such adjoining lands. No use of the surface of any lake or stream shall be permitted for any purpose not permitted on the land from which the use emanates.

3.4 Intent of Districts. The intent and purpose of each district is set forth as follows:

A. AG, Agriculture. The Agricultural Districts are intended to provide areas where farming, dairying, raising of animals, forestry, raising of nursery stock, and similar rural activities can coexist with rural residential development on acreage homesites. These areas are not expected to be serviced by public utilities, such as sanitary sewers, and their preservation will enhance the Township's overall character and prevent premature, scattered development.

B. SF-1, 2 and 3, Suburban Farms. The Suburban Farms districts are intended to have a low population and development density in order to protect areas that have significant topography, scenic beauty or other unique natural resources that should be preserved and enhanced. It is further the intent of the Suburban Farms districts to foster a residential environment for individuals and families that is more open and rural, and at a lower

density than the Single-Family Residential districts. Sanitary sewer service is not anticipated to be available within the Suburban Farms districts.

C. R-1A, 1, 2 and 3, Single-Family Residential. The intent of the Single-Family Residential districts is to provide districts in which the principal land use is single-family residential, along with those uses which are compatible with a single-family residential environment and are customarily accessory to or supportive of such uses. A reasonable range of lot sizes is envisioned which will provide a variety of desirable and economically feasible housing opportunities for all members of the general public. Certain other private and public uses are also intended for these districts, subject to conditions which will insure their compatibility with the main use and character of these districts.

D. RM, Multiple-Family Residential. The intent of the Multiple-Family Residential district is to provide sites for two-family and multiple-family residential land use, along with those uses which are compatible with a multiple-family residential environment and are customarily accessory to or supportive of such uses. These districts are intended to serve the Township's limited needs for higher density residential land use. Such districts shall serve as zones of transition between non-residential districts and lower density single-family districts, and shall have access to major thoroughfares and centralized sewer and water facilities. Certain other private and public uses are also intended for these districts, subject to conditions which will insure their compatibility with the main use and character of these districts.

E. MHC, Manufactured Housing Community. The intent of the Manufactured Housing Community district is to provide districts of such size and location as will encourage the development of quality manufactured housing communities, in areas of the Township having access to major thoroughfares and centralized sewer and water facilities, and otherwise protecting the health, safety and welfare of manufactured housing community residents in the Charter Township Oxford.

F. C-1, Local Commercial. The Local Commercial districts are intended to provide a limited number of locations for clusters of retail stores and personal service establishments for the everyday convenience of the nearby residential neighborhoods. In order to protect nearby residential areas, all C-1 uses must be conducted within a completely enclosed building.

G. C-2, General Commercial. The General Commercial districts are intended to provide sites for more intensive and more diversified business types that would typically serve community and regional trade areas and might have a negative impact on adjoining residential areas because of intensity or outdoor activities.

H. O, Office. The intent of the Office districts is to provide locations in the Township for professional offices and related uses of a lower-intensity nature than those found in the Township's commercial and industrial districts, developed in a fashion that is compatible with neighboring land uses. Such districts shall serve as zones of transition between commercial/industrial districts and residential areas. It is intended that such uses have access to major thoroughfares and centralized sewer and water facilities.

I. RO, Research-Office. The Research-Office districts are intended to provide sites for uses which combine research, office, manufacturing, and/or educational activities within the same building or group of buildings in a campus or planned development atmosphere. All activities within the Research-Office Districts are intended to occur within completely enclosed buildings to that there will be no external physical effects on adjoining properties in other districts.

J. I-1, Light Industrial. The Light Industrial districts are intended to accommodate certain industrial, research and warehousing activities whose external physical effects are minimal, plus wholesale and intensive service activities of a nature that does not justify their inclusion in any commercial use district. It is also the intent of this Article to encourage the development of planned industrial parks characterized by principal uses which are located in a building on a landscaped site, served by adequate off-street parking, loading, and screening of adjacent districts.

K. I-2, General Industrial. The General Industrial districts are intended to accommodate large scale assembly and fabrication activities, including specialized industrial operations whose external physical effects could adversely affect surrounding uses and districts in the absence of special review and discretionary approval by The Planning Commission. The General Industrial districts are also intended to permit manufacturing, compounding, and processing of products from raw materials only by special approval.

L. R, Recreation. The Recreation districts are intended to allow, with regulation, public and private recreational use of lands with such amenities as lakes, streams, pronounced topography, woodlands, wetlands, flood plains and similar natural features. It is further the intent of these districts that any use, improvement, or development of these lands should be designed to safeguard, preserve, and protect the natural features.

M. G, Gravel and Sand Overlay. The Gravel and Sand Overlay districts are intended for those lands that have significant gravel and/or sand deposits and which will be mined and reclaimed under the provisions of this Article in a manner that protects the public health, safety and welfare, and in accordance with a reclamation plan consistent with the underlying, principal

zoning classification and the Township's adopted Master Plan for the particular geographic area. It is the intent of this district that all gravel and sand mining operations reclaim the mining sites in a fashion that preserves the value of the property and facilitates reuse of the land consistent with the Township's adopted Master Plan.

3.5 Schedule of Use Regulations. Permitted and special land uses are set forth by zoning district as follows:

A. AG, Agriculture.

1. Permitted Uses.

   a. Agricultural uses in compliance with the Right to Farm Act, P.A. 93 of 1981.

   b. Roadside stand for sale of agricultural products raised or grown on the premises, subject to Section 6.15.

   c. Public or private conservation area, forest preserve, game refuge, wildlife preserve, or park.

   d. Single-family dwelling, detached.

   e. Keeping of Farm Animals, subject to Section 6.24.

   f. Child or Adult Family Day Care Home.

   g. Adult Foster Care Family Home.

   h. Home occupations, subject to Section 6.10.

   i. Essential services, subject to Section 6.8.

   j. Accessory buildings, structures or uses that are customarily incidental to those uses listed above, subject to Section 6.2.

2. Special Uses.

   a. Agribusiness use, such as:

      i. Cider mill;

      ii. Demonstration farm open to the public;

      iii. Farm implement sales or repair operation;

      iv. Fertilizer, feed or seed sales facility;

      v. Livestock auction yard;

   b. Bed and Breakfast Establishment, Subject to Section 5.5.

   c. Campground, subject to Section 5.6.

   d. Cemetery.

   e. Church, subject to Section 5.10.

   f. Commercial kennel, subject to Section 5.22.

   g. Commercial, non-farm nursery or greenhouse.

   h. Commercial outdoor recreation, subject to Section 5.12.

   i. Country club.

   j. Domestic radio, television broadcast station, receiving or broadcasting towers, excluding wireless / cellular towers / facilities.

   k. Golf course or driving range, subject to Section 5.17.

   l. Horse Riding Stable and Sales Barn, subject to Section 5.19.

   m. Oil or gas extraction.

   n. Private airport.

   o. Private elementary, middle, or secondary school; college or university.

   p. Private Kennel, subject to Section 5.22.

   q. Recreational vehicle storage, subject to Section 8.8.

   r. Temporary housing for seasonal labor.

   s. Veterinary clinic, large animal.

   t. Wireless communication facilities, subject to Section 5.32.

   u. Yard Waste Composting Facilities, subject to Section 5.33.

B. SF-3, Suburban Farms.

1. Permitted Uses.

   a. Agricultural uses in compliance with the Right to Farm Act.

   b. Roadside stand for sale of agricultural products raised or grown on the premises, subject to Section 6.15.

   c. Public or private conservation area, forest preserve, game refuge, wildlife preserve, or park.

   d. Single-family dwelling, detached.

   e. Keeping of Farm Animals subject to Section 6.24.

   f. Child or Adult Family Day Care Home.

   g. Adult Foster Care Family Home.

   h. Home occupations, subject to Section 6.10.

   i. Essential services, subject to Section 6.8.

   j. Accessory buildings, structures or uses that are customarily incidental to those uses listed above, subject to Section 6.2.

2. Special Land Uses.

   a. Bed and Breakfast Establishment, Subject to Section 5.5.

   b. Cemetery.

   c. Church, subject to Section 5.10.

   d. Commercial kennel, subject to Section 5.22.

   e. Commercial, non-farm nursery or greenhouse.

   f. Commercial outdoor recreation, subject to Section 5.12.

   g. Country club.

   h. Domestic radio, television broadcast station, receiving or broadcasting towers, excluding wireless / cellular towers / facilities.

   i. Golf course or driving range, subject to Section 5.17.

   j. Horse Riding Stable and Sales Barn, subject to Section 5.19.

   k. Oil or gas extraction.

   l. Private airport.

   m. Private elementary, middle, or secondary school; college or university.

   n. Private Kennel, subject to Section 5.22.

   o. Recreational vehicle storage, subject to Section 8.8.

   p. Veterinary clinic, large animal.

   q. Wireless communication facilities, subject to Section 5.32.

C. SF-2, Suburban Farms

1. Permitted Uses.

   a. All permitted uses in the SF-3 district.

2. Special Land Uses.

   a. All special land uses in the SF-3 district.

D. SF-1, Suburban Farms.

1. Permitted Uses.

   a. All permitted uses in the SF-2 and SF-3 districts.

2. Special Land Uses.

   a. All special land uses in the SF-2 and SF-3 districts.

E. R-3, Single -Family Residential.

1. Permitted Uses.

   a. Single-family dwelling, detached.

   b. Child or Adult Family Day Care Home.

   c. Adult Foster Care Family Home.

   d. Home occupations, subject to Section 6.10.

   e. Essential services, subject to Section 6.8.

   f. Accessory buildings, structures or uses that are customarily incidental to those uses listed above, subject to Section 6.2.

2. Special Uses.

   a. Adult Foster Care Group Home, subject to Section 5.16.

   b. Child or Adult Group Day Care Home, subject to Section 5.15.

   c. Child Day Care Center, subject to Section 5.15.

   d. Church.

   e. Private elementary, middle, or secondary school; college or university.

   f. Private Kennel, subject to Section 5.22.

   g. Community swimming pool.

   h. Libraries, museums or similar non-commercial cultural facilities.

   i. Convalescent/Nursing Home, subject to Section 5.14

   j. Public or private parks and recreation activities and conservation areas.

F. R-2, Single-Family Residential.

1. Permitted Uses.

   a. Single-family dwelling, detached.

   b. Child or Adult Family Day Care Home.

   c. Adult Foster Care Family Home.

   d. Home occupations, subject to Section 6.10.

   e. Essential services, subject to Section 6.8.

   f. Accessory buildings, structures or uses that are customarily incidental to those uses listed above, subject to Section 6.2.

2. Special Uses.

   a. Adult Foster Care Group Home, subject to Section 5.16.

   b. Child or Adult Group Day Care Home, subject to Section 5.15.

   c. Child Day Care Center, subject to Section 5.15.

   d. Church.

   e. Private elementary, middle, or secondary school; college or university.

   f. Private Kennel, subject to Section 5.22.

   g. Community swimming pool.

   h. Libraries, museums or similar non-commercial cultural facilities.

   i. Convalescent/Nursing Home, subject to Section 5.14.

   j. Public or private parks and recreation activities and conservation areas.

G. R-1, Single-Family Residential.

1. Permitted Uses.

   a. Single-family dwelling, detached.

   b. Child or Adult Family Day Care Home.

   c. Adult Foster Care Family Home.

   d. Home occupations, subject to Section 6.10.

   e. Essential services, subject to Section 6.8.

   f. Accessory buildings, structures or uses that are customarily incidental to those uses listed above, subject to Section 6.2.

2. Special Uses.

   a. Adult Foster Care Group Home, subject to Section 5.16.

   b. Child or Adult Group Day Care Home, subject to Section 5.15.

   c. Child Day Care Center, subject to Section 5.15.

   d. Church.

   e. Private elementary, middle, or secondary school; college or university.

   f. Community swimming pool.

   g. Libraries, museums or similar non-commercial cultural facilities.

   h. Public or private parks and recreation activities and conservation areas.

H. R-1A, Single-Family Residential.

1. Permitted Uses.

   a. Single-family dwelling, detached.

   b. Child or Adult Family Day Care Home.

   c. Adult Foster Care Family Home.

   d. Home occupations, subject to Section 6.10.

   e. Essential services, subject to Section 6.8.

   f. Accessory buildings, structures or uses that are customarily incidental to those uses listed above, subject to Section 6.2.

2. Special Uses.

   a. Adult Foster Care Group Home, subject to Section 5.16.

   b. Child or Adult Group Day Care Home, subject to Section 5.15.

   c. Child Day Care Center, subject to Section 5.15.

   d. Church.

   e. Private elementary, middle, or secondary school; college or university.

   f. Community swimming pool.

   g. Libraries, museums or similar non-commercial cultural facilities.

   h. Public or private parks and recreation activities and conservation areas.

I. RM, Multiple-Family Residential.

1. Permitted Uses.

   a. Multiple-family dwelling.

   b. Single-family dwelling, attached.

   c. Public or private parks and recreation activities and conservation areas.

   d. Child or Adult Family Day Care Home.

   e. Adult Foster Care Family Home.

   f. Municipal buildings not requiring outdoor storage.

   g. Police, fire or emergency medical station.

   h. Home occupations, subject to Section 6.10.

   i. Essential services, subject to Section 6.8.

   j. Accessory buildings, structures or uses that are customarily incidental to those uses listed above, subject to Section 6.2.

2. Special Uses.

   a. Adult Foster Care Group Home, subject to Section 5.16.

   b. Child or Adult Group Day Care Home, subject to Section 5.15.

   c. Child Day Care Center, subject to Section 5.15.

   d. Church.

   e. Community swimming pool.

   f. Golf course.

   g. Funeral home.

   h. Private elementary, middle, or secondary school; college or university.

   i. Libraries, museums or similar non-commercial cultural facilities.

   j. Convalescent/Nursing Home, subject to Section 5.14

J. MHC, Manufactured Housing Community.

1. Permitted Uses.

   a. Manufactured Housing Community developments subject to all minimum requirements and standards as established in the Mobile Home Commission Act, Act 96 of 1987 as amended, and all rules promulgated pursuant to Act 96, as may be amended, and further subject to Section 3.8(C).

   b. Recreational facilities for the residents of manufactured housing communities.

   c. Accessory buildings required for normal operation of the mobile home development. Such uses as stores, mechanical dispensers, equipment storage, and coin operated laundry facilities, subject to Section 3.8(C).

   d. Administration building for conducting the operation and maintenance of Manufactured Housing Community developments.

   e. Family Day Care Home.

   f. Adult Foster Care Family Home.

   g. Essential services, subject to Section 6.8.

2. Special Uses.

   a. Adult Foster Care Group Home, subject to Section 5.16.

   b. Child or Adult Group Day Care Home, subject to Section 5.15.

   c. Child Day Care Center, subject to Section 5.15.

K. C-1, Local Commercial

1. Permitted Uses.

   a. Retail use of up to 10,000 square feet in gross floor area, including but not limited to, convenience stores, bakeries, butchers, specialty grocers, pharmacies, etc.

   b. Financial or business service establishment, including but not limited to, banks, credit unions, insurance offices, etc..

   c. Personal service establishment.

   d. Dry cleaning drop-off center.

   e. Laundromat.

   f. Professional office for doctors, dentists, lawyers, architects, engineers, or other similar professions.

   g. Post offices or other similar governmental office serving nearby residential areas.

   h. Police, fire or emergency medical station.

   i. Club or lodge.

   j. Essential services and structures, transmission and distribution lines, pipelines, telephone repeaters and related structures, subject to Section 6.8.

   k. Accessory buildings, structures or uses that are customarily incidental to those uses listed above, subject to Section 6.2.

   l. Uses which, in the opinion of the Planning Commission, are similar to the above permitted uses.

2. Special Land Uses.

   a. Automobile Service Station, subject to Section 5.3.

   b. Automobile Convenience Mart, subject to Section 5.3.

   c. Day Care Center, subject to Section 5.15.

   d. Funeral home.

   e. Commercial indoor or outdoor recreation, subject to Sections 5.11 and 5.12.

   f. Restaurant, Sit-Down or Carry-Out.

   g. Accessory buildings, structures or uses that are customarily incidental to those uses listed above, subject to Section 6.2.

L. C-2, General Commercial

1. Permitted Uses.

   a. All uses permitted by right in the C-1 district.

   b. Retail uses of up to 70,000 square feet in gross floor area, including but not limited to, supermarkets, pharmacies, etc.

   c. Restaurant, Sit-Down or Carry-Out.

   d. Day Care Center, subject to Section 5.15.

   e. Health and fitness club.

   f. Funeral home.

   g. Theater, excluding drive-in theater.

   h. Public or private college.

   i. Essential services and structures, transmission and distribution lines, pipelines, telephone repeaters and related structures, subject to Section 6.8.

   j. Accessory buildings, structures or uses that are customarily incidental to those uses listed above, subject to Section 6.2.

   k. Commercial Indoor Recreation, subject to Section 5.11.

   l. Uses which, in the opinion of the Planning Commission, are similar to the above permitted uses.

2. Special Land Uses.

   a. All special uses permitted in the C-1 district, excepting those that are permitted by right in the C-2 district.

   b. Retail uses of more than 70,000 square feet (GFA), including but not limited to, supermarkets, pharmacies, discount stores, membership warehouses, etc.

   c. Automobile Repair Establishment, subject to Section 5.3.

   d. Automobile Wash Establishment, subject to Section 5.4.

   e. Automobile or RV Sales Establishment, subject to Section 6.13.

   f. Assembly or dance hall.

   g. Bar or lounge.

   h. Commercial kennel, subject to Section 5.22.

   i. Motel or hotel, subject to Section 5.26.

   j. Equipment and/or vehicle rental.

   k. Drive-in/drive-thru business associated with permitted use, subject to Section 6.6.

   l. Open air business, subject to Section 613.

   m. Outdoors sale and display of products, subject to Section 6.13.

   n. Veterinary clinic

   o. Transient, temporary amusements, subject to Section 5.12.

   p. Domestic radio, television broadcast station, receiving or broadcasting towers, excluding wireless / cellular towers / facilities.

   q. Wireless Communication Facilities, subject to Section 5.32.

   r. Accessory buildings, structures or uses that are customarily incidental to those uses listed above, subject to Section 6.2.

M. O, Office.

1. Permitted Uses.

   a. Administrative or professional office, including, but not limited to, doctors, lawyers, dentists, engineers, architects, tax or financial consultants, realtors, insurance agents, or brokers.

   b. Medical or dental office, excluding veterinarian establishments and medical facilities permitting overnight patients.

   c. Office of local, state or federal governmental agency.

   d. Office of non-profit organizations, including, but not limited to, labor unions; civic, social or fraternal associations; or political or religious organizations, excluding those requiring large meeting or assembly halls.

   e. Data processing or computer center, including sales, service and maintenance of electronic data processing equipment.

   f. Police, fire or emergency medical station.

   g. Essential services and structures, transmission and distribution lines, pipelines, telephone repeaters and related structures, subject to Section 6.8.

   a. Accessory buildings, structures or uses that are customarily incidental to those uses listed above, subject to Section 6.2.

   b. Uses which, in the opinion of the Planning Commission, are similar to the above permitted uses.

2. Special Land Uses.

   a. Laboratory and office for industrial, scientific, or business research, development and testing, including limited manufacturing operations incidental to these uses equal to no more than twenty-five (25) percent of the total usable floor area.

   b. Prototype development and testing facility, including limited manufacturing operations incidental to these uses equal to no more than twenty-five (25) percent of the total usable floor area.

   c. Motel or hotel, subject to Section 5.26.

   d. Day Care Center, subject to Section 5.15.

   e. Accessory buildings, structures or uses that are customarily incidental to those uses listed above, subject to Section 6.2.

N. RO, Research-Office.

1. Permitted Uses.

   a. Laboratory and office for industrial, scientific, or business research, development and testing, including limited manufacturing operations incidental to these uses equal to no more than twenty-five (25) percent of the total usable floor area.

   b. Prototype development and testing facility, including limited manufacturing operations incidental to these uses equal to no more than twenty-five (25) percent of the total usable floor area.

   c. Any use whose principal function is technical training.

   d. Universities, and similar institutions, providing technical education.

   e. Accessory buildings, structures or uses that are customarily incidental to those uses listed above, subject to Section 6.2.

   f. Uses which, in the opinion of the Planning Commission, are similar to the above permitted uses.

2. Special Land Uses.

   a. Pharmaceutical manufacturing and similar or related uses, excluding retail sales.

O. I-1, Light Industrial.

1. Permitted Uses.

   a. All permitted uses in the O district.

   b. The manufacture, assembly, compounding, processing, packaging or treatment from previously prepared materials, or repair of products, including, but not limited to:

      i. Textile goods;

      ii. Apparel or leather goods;

      iii. Sporting goods;

      iv. Light sheet metal products, including heating or ventilating equipment, siding, and the like;

      v. Electric or neon signs;

      vi. Furniture or fixtures;

      vii. Glass products (using purchased glass);

      viii. Converted paper or paper products;

      ix. Printing or publishing;

      x. Jewelry, silverware or plated ware;

      xi. Office or artists supplies and materials;

      xii. Professional or scientific instruments, photographic and optical equipment and supplies;

   c. Wholesale or warehouse establishment.

   d. Contractor establishment, equipment and material storage yard, subject to Section 10.5.

   e. Self storage facility.

   f. Scientific research facility or testing laboratory.

   g. Automobile Repair Establishment, subject to Section 5.3.

   h. Truck or Heavy Equipment Sales Establishment, subject to Section 6.13.

   i. Equipment and/or vehicle rental.

   j. Agricultural wholesale or retail facility, including bulk storage of commodities in elevators or other transfer structures.

   k. Police, fire or emergency medical station.

   l. Municipal equipment or material storage yard.

   m. Radio TV broadcasting, transmitting or receiving towers.

   n. Commercial indoor recreation, subject to Section 5.11.

   o. Essential services, subject to Section 6.8.

   p. Accessory buildings, structures or uses that are customarily incidental to those uses listed above, subject to Section 6.2.

   q. Uses which, in the opinion of the Planning Commission, are similar to the above permitted uses.

2. Special Uses.

   a. All special uses permitted in the O district, except those that are permitted by right in the I-1 district.

   b. Cartage, trucking or distribution center.

   c. Bulk storage of refined petroleum products above or below ground.

   d. Building material or lumber supply (sales and/or storage).

   e. Private airport

   f. Central dry cleaning plant.

g. Recycling collection center.

h. Commercial outdoor storage, subject to Section 10.5.

i. Fabrication of metal products, excepting heavy machinery and transportation equipment.

j. Junk yard or salvage operation, subject to Section 5.21.

k. Lumber mill or saw mill.

l. Manufacture of monuments, cut stone, stone or clay products.

m. Municipal water or waste water treatment facility.

n. Radio, television, telephone, transmitter tower.

o. Recreational vehicle storage, subject to Section 10.5.

p. Sales, leasing, or storage of contractor's equipment or supplies.

q. Heavy Vehicle Repair Establishment, including, trucks, farm and construction equipment, subject to Section 5.18.

r. Wireless Communication Facility, subject to Section 5.32.

s. Retail sales of goods assembled on the premises, provided the building floor area devoted to retail sales comprises no more than twenty-five (25) percent of principal building usable floor area and the outdoor sales area comprises no more than twenty-five (25) percent of the minimum required lot area.

t. Accessory buildings, structures or uses that are customarily incidental to those uses listed above, subject to Section 6.2.

P. I-2, General Industrial.

1. Permitted Uses.

   a. All permitted uses in the I-1 and RO District.

   b. Any manufacturing or other industrial-type or related use including but not limited to the following:

      i. The manufacturing, fabrication and assembling of motor vehicle equipment and parts, farm machinery and equipment, heavy industrial machinery and equipment;

      ii. Production, manufacturing, processing and packaging of such products as cereals, dog foods, soft drinks, and distillation of grains and fruits;

      iii. Drop forges, heavy stamping, fabricating, assembly and other manufacturing processes, except tanneries, slaughter houses, stock yards, oil refineries, or soap factories;

      iv. Lumber mill or saw mill;

      v. Manufacturing or processing of wood, concrete, cinder block and brick;

      vi. Manufacture of major appliances;

      vii. Pressing, stamping or forming of major sheet metal parts; and

      viii. Manufacture of iron, aluminum, bronze and other castings.

   c. Cartage, trucking or distribution center.

   d. Certain uses, which, by their nature, would be dangerous in a community with large residential areas, are prohibited;

   e. Essential services and structures, transmission and distribution lines, pipelines, telephone repeaters and related structures, subject to Section 6.8;

   f. Accessory buildings, structures or uses that are customarily incidental to those uses listed above, subject to Section 6.2;

   g. Uses which, in the opinion of the Planning Commission, are similar to the above permitted uses.

2. Special Uses.

   a. All special uses in the I-1 and RO Zoning District.

   b. Production, processing or packaging of such products as cosmetics, toiletries, and pharmaceuticals.

   c. Landfill, subject to Section 5.23.

   d. Materials recycling facility.

   e. Commercial composting.

   f. Slaughterhouses.

   g. Adult Regulated Uses, subject to Section 5.1.

Q. G, Gravel and Sand Overlay.

1. Permitted Uses.

   a. Plants for processing, transportation and marketing of sand, gravel and/or stone together with accessory buildings, equipment and facilities.

   b. Storage and stockpiling of the sand, gravel and/or stone being mined.

   c. Outdoor recreation uses, subject to Section 5.12.

2. Special Uses.

   a. Mining of sand, gravel, and/or stone, subject to Section 5.25.

   b. Private Aircraft Landing Strips.

   c. Temporary, Open-Air Uses of an Industrial character.

   d. Yard Waste Composting Facilities, subject to Section 5.33.

R. R, Recreation.

1. Permitted Uses.

   a. Public or private conservation area, forest preserve, game refuge, wildlife preserve, or park, but excluding motorized, off-road vehicles of all types.

   b. Golf course or driving range, subject to Section 5.17.

   c. Boat liveries and marinas.

   d. Caretaker's Quarters, subject to Section 5.7.

   e. Uses which, in the opinion of the Planning Commission, are similar to the above permitted uses.

   f. Accessory buildings, structures or uses that are customarily incidental to those uses listed above, subject to Section 6.2.

2. Special Uses.

   a. Campground, subject to Section 5.6.

   b. Commercial outdoor recreation, subject to Section 5.12.

   c. Clubs, lodge halls, rental or catering halls, and similar uses.

   d. Hotels and motels.

   e. Restaurants and Concession Stands.

3.6 Determination of Similar Uses. In recognition that every potential use cannot be listed in this Zoning Ordinance, the Planning Commission is authorized to determine if a use not listed within a particular zoning district is sufficiently similar to other uses to permit that use within the zoning district without requiring an amendment to this Zoning Ordinance. The Planning Commission shall make a determination of such a similar use according to the following standards:

A. A finding that the proposed use is not listed as a permitted principal use or special land use in any other zoning district shall be made.

B. The Planning Commission shall select the use listed in this Zoning Ordinance which most closely resembles the proposed use, using criteria such as the potential impact on property values, traffic generated, aesthetics, noise, vibration, dust, smoke, odor, glare and other objectionable impacts in terms of the health, safety and welfare of the City. The Planning Commission may request documentation or studies from the applicant or Township staff or consultants to evaluate potential impacts associated with the use, or they may decide there is no similar use.

C. If a similar use is determined, the proposed use shall comply with any special conditions or standards that apply to the similar use.

3.7 Schedule of District Regulations.

District	Minimum Lot Area [A, B]	Min. Lot Width [C, D]	Minimum Yard Setback [E]			Maximum Bldg. Height [F, G]		Maximum Lot Coverage [H]	Additional Regulations
			Front [I, J]	Side [J]	Rear	Feet	Stories		
AG, Agriculture	20 acres	600 ft.	50 ft.	60 ft.	75 ft.	35 ft. [K]	2½	10%	See §3.8(A)
SF-3, Suburban Farms	10 acres	330 ft.	50 ft.	50 ft.	60 ft.	35 ft.	2½	15%	See §3.8(A)
SF-2, Suburban Farms	5 acres	300 ft.	40 ft.	50 ft.	50 ft.	35 ft.	2½	15%	See §3.8(A)
SF-1, Suburban Farms	2.5 acres	200 ft.	40 ft.	50 ft.	50 ft.	35 ft.	2½	20%	See §3.8(A)
R-3, Single-Family Residential	1 acre	150 ft.	35 ft.	15 ft.	30 ft.	35 ft.	2½	25%	See §3.8(A)
R-2, Single-Family Residential	25,000 s.f.	120 ft.	30 ft.	12.5 ft.	25 ft.	35 ft.	2½	30%	See §3.8(A)
R-1, Single-Family Residential	12,000 s.f.	80 ft.	25 ft.	10 ft.	20 ft.	35 ft.	2½	35%	See §3.8(A)
R-1A, Single-Family Residential	6,000 s.f.	60 ft.	25 ft.	7.5 ft.	20 ft.	35 ft.	2½	40%	See §3.8(A)
RM, Multiple-Family Residential	See §3.8(B)	200 ft.	35 ft.	20 ft.	40 ft.	45 ft. [L]	3	40%	See §3.8(B)
MHC, Manufactured Housing Community	10 acres	330 ft.	40 ft.	20 ft.	35 ft.	25 ft. [L]	2	35%	See §3.8(C)
C-1, Local Commercial	10,000 s.f.	100 ft.	35 ft.	20 ft. [M]	25 ft.	35 ft.	2	30%	–
C-2, General Commercial	1 acre	150 ft.	35 ft.	30 ft. [M]	30 ft.	35 ft.	2	30%	–
O, Office	10,000 s.f.	100 ft.	35 ft.	20 ft.	25 ft.	45 ft.	3	30%	–
RO, Research Office	1 acre	150 ft.	50 ft.	25 ft.	50 ft.	40 ft.	2	30%	
I-1, Light Industrial	1 acre	150 ft.	50 ft.	25 ft.	50 ft.	40 ft.	2	35%	–
I-2, General Industrial	2 acres	200 ft.	75 ft.	50 ft.	75 ft.	50 ft.	2	40%	–
R, Recreation	5 acres	330 ft.	50 ft.	50 ft.	50 ft.	35 ft.	2½	10%	
G, Gravel and Sand Overlay	See Section 5.25								

Footnotes to the Schedule of District Regulations

A. Net Lot Area, as defined in Section 2.2, shall be used to determine compliance with Minimum Lot Area requirements.

B. When the parcel is not serviced by a centralized sanitary sewer system, the minimum parcel area shall be determined by the ability to provide an adequately sized septic system as approved by the Oakland County Health Division or other governing agencies having jurisdiction.

C. The ratio of the lot depth to lot width shall not exceed the following:

Parcel Size	Maximum Lot Depth-to-Width Ratio
One (1) acre or less	2.5 to 1
1.01 - 10.0 acres	3.5 to 1
10.01 - 20 acres	4.5 to 1
> 20 acres	5.0 to 1

D. Lot width shall be measured as defined in Section 2.2 to determine compliance with Minimum Lot Width requirements**.** A structure shall not be erected on a lot where the lot axis (used to determine lot width) falls outside of the boundaries of the lot.

E. Permitted Yard Encroachments. Chimneys, fire escapes, balconies, bay windows, roofed porches and similar projections shall be considered integral parts of the building to which they are attached, and shall be subject to all yard and setback requirements. The items listed below may be permitted to encroach upon required yards, according to the standards provided for each, however all other applicable standards of this or any other ordinance shall remain in effect.

1. Terraces, Patios. Terraces, patios, and similar accessory structures that are not attached to a principal or accessory building and are unroofed and without walls or other continuous enclosure may encroach upon required side or rear yards, but shall be no closer than five (5) feet from the side or rear lot line. Such structures may have open railings or fences not exceeding four (4) feet in height and may have non-continuous windbreaks or visual screens not exceeding six (6) feet in height. Such structures are not permitted to encroach into the required front yard.

2. Unenclosed, Unroofed Porches. Unenclosed and unroofed porches and decks, that are attached to a principal or accessory building may encroach upon a required rear yard, but shall be no closer to the rear lot line than one-half (½) the distance of the required rear yard setback. Such structures may have open railings or fences

not exceeding four (4) feet in height and may have non-continuous windbreaks or visual screens not exceeding six (6) feet in height. Such structures are not permitted to encroach into the required front or side yards.

3. Architectural Features. Eaves, gutters, sills, pilasters, cornices, belt courses, leaders, and similar architectural features may project into any required yard a maximum of twenty-four (24) inches.

4. Residential Air Conditioning Equipment. Air conditioning equipment may encroach into required side or rear yards, but shall be no closer than five (5) feet from the side or rear property line. Such structures are not permitted to encroach into the required front yard.

5. Encroachments Permitted in All Yards. Fences, landscaping, arbors, trellises, driveways and similar items may encroach upon any required yard.

F. Building Height shall be measured in accordance with the definition for Building Height provided in Section 2.2.

G. Exemptions from Building Height Regulations. The following structures and appurtenances shall be exempt from the height regulations of this ordinance: cupolas, spires, belfries, mechanical penthouses, and domes; chimneys, ventilators, skylights, water tanks, windmills, public utility transmission and distribution lines and related structures; radio and television broadcasting and receiving antennae; barns, agricultural wind energy conversion systems, silos, grain storage bins and associated equipment; parapets, and other appurtenances usually required to be placed above roof level and not intended for human occupancy. Where exemption from the height regulations of this ordinance for such structures and/or appurtenances is necessary to preserve the function of a particular, the height shall be no greater than that which is minimally necessary to accomplish the intended function. Wireless and/or cellular towers and/or facilities shall not be exempt from the height restrictions of this ordinance.

H. Lot coverage shall be measured as the percentage of Net Lot Area covered by Building Area, as defined in Section 2.2.

I. Minimum Front Yard Setback shall be measured from the Front Lot Line, as defined in Section 2.2.

J. Corner lots shall maintain the Minimum Front Yard Setback from all lot lines fronting on a public or private road.

K. The maximum height of barns shall be 50 feet, unless exempt from zoning requirements pursuant to Section 6.3.

L. Detached accessory buildings (clubhouses, maintenance buildings, etc.) in the RM and MHC districts shall not exceed 25 feet in height.

M. Interior side yards are not required, subject to any regulations of the Building Code and adequate access for parking, delivery, and emergency services.

3.8 Additional Regulations.

A. Single-Family Residential Regulations. No single-family dwelling (site built), manufactured housing unit, mobile home, modular housing or prefabricated housing located outside of a licensed manufactured housing community shall be permitted unless said dwelling unit conforms to the following standards:

1. Building Permit Required. No single-family dwelling unit shall be constructed without the prior issuance of all necessary Township and/or County building permits.

2. Minimum Floor Area. The minimum floor area provided for a single-family dwelling unit shall be as follows:

Stories	Minimum Gross Floor Area Required
1	960 sq. ft.
1½	1,200 sq. ft., with a 900 sq. ft. first floor
2	1,500 sq. ft., with a 900 sq. ft. first floor

3. Minimum Building Width. The minimum width of the front elevation of a single-family dwelling shall be twenty (20) feet.

4. Elevation of First Floor. All single-family dwellings shall be constructed so that the finish floor elevation of the first floor is no less than twelve (12) inches nor greater than thirty-six (36) inches above the centerline of the road upon which the lot fronts, except as follows:

a. Where the existing elevation of the of the land upon which the dwelling is proposed is greater than twelve (12) inches above the centerline of the road, the finish floor elevation of the first floor shall not exceed eighteen (18) inches above the existing ground elevation.

b. If the finish floor elevation of the first floor of a dwelling is requested to be more than thirty-six (36) inches above the centerline of the road upon which it fronts, a detailed drainage

plan, prepared by a civil engineer or landscape architect, shall be provided, demonstrating the following:

i. how the lot will drain;

ii. that the filling of the lot will not disrupt the natural flow of surface water through or across the parcel of land; and,

iii. that there will be no additional flow of water onto adjoining parcels of land.

5. Foundation.

a. All single family dwelling units (including premanufactured housing) shall be firmly attached to a permanent foundation constructed on the site in accordance with the Michigan Residential Code.

b. All premanufactured dwelling units shall be installed with the wheels removed. Additionally, no dwelling unit shall have any exposed towing mechanism, undercarriage or chassis.

6. Roof.

a. Roofs on single-family dwelling units shall be double pitched, having a slope of no less than six (6) feet of rise for each twelve (12) feet of run over the majority of the dwelling unit. Additions or repairs to existing dwelling units may involve roof pitches compatible with existing roof pitches.

b. All single-family dwelling units shall have at least a twelve (12) inch roof overhang on the eave sides and gable ends of the building. Such overhang shall be exclusive of gutters.

c. Roofs on single-family dwelling units shall be covered in either asphalt, fiberglass, shake or slate shingles.

7. Quality of Workmanship. All rooms and other additions to a dwelling unit shall be of a similar or superior quality of construction as the original portion of the principal structure.

8. Applicable Codes. All single-family dwelling units, including all alterations and additions thereto, shall comply with applicable building and fire codes. In the case of mobile homes or manufactured housing units, all construction, plumbing, electrical systems, and insulation within and connected to said mobile home or manufactured housing unit shall be of a type and quality conforming to the stand-

ards promulgated by the United States Department of Housing and Urban Development, being 24 CFR 3280 or 24 CFR 3282, respectively, and as from time to time may be amended. Additionally, all dwellings shall meet or exceed all applicable snow load and strength requirements.

9. Sanitary Service and Water Supply. All dwelling units shall be connected to public sanitary sewer and water service, or a private septic system and well, in accordance with all applicable codes and ordinances.

10. Storage. All dwelling units shall include a storage area equal to at least 10% of the gross floor area of the dwelling or 100 square feet, whichever is less. Such storage area shall be accommodated via basements, attics, closets, or a separate structure of similar construction to that of the principal dwelling.

B. Multiple-Family Residential District Regulations. The following regulations shall apply to all development in the RM district:

1. Unit Density. The maximum permitted density of multiple-family dwelling units shall be based upon the total number of bedrooms. The maximum number of bedrooms permitted shall be equal to the gross buildable area of the subject parcel or development site (in square feet) divided by 1,800. For the purposes of this calculation, efficiency units shall be considered to have one (1) bedroom.

2. Minimum Lot Area. The minimum lot area required per dwelling unit, in square feet, in the RM district shall be based on the following schedule:

Efficiency or 1 bedroom unit	3,000
2 bedroom unit	4,000
3 bedroom unit	5,000
4 or more bedroom unit	6,000

For purposes of the above calculations, a den, library, or other extra room shall be counted as a bedroom. In addition to the above requirements, no RM development shall exceed an overall density of ten (10) dwelling units per acre.

Sites containing only two-family dwellings shall have a minimum lot area of 17,000 square feet.

3. Building Length. Multiple-family buildings shall not exceed 200 feet in overall length.

4. Setbacks Adjacent to Single-Family Residential. No multiple family dwelling shall be located closer than one hundred (100) feet to property zoned or used for single-family residential purposes, including AG, SF-1, SF-2, SF-3, R-1A, R-1, R-2, and R-3.

5. Building Spacing. In addition to required yard setbacks provided elsewhere in this Ordinance, where two (2) or more multiple-family dwelling structures exist on the same parcel, the following minimum separation distances shall be maintained:

   a. Where buildings are front-to-front or front-to-rear, a minimum separation of 70 feet shall be provided;

   b. Where buildings are side-to-side, a minimum separation of 20 feet shall be provided;

   c. Where buildings are front-to-side, rear-to-side or rear-to-rear, a minimum separation of 45 feet shall be provided.

6. Access. Multiple-family developments shall have paved access to a major collector or arterial road.

7. Internal Streets, Drives and Parking. All internal parking and circulation areas shall meet the standards provided in Article 8.

8. Pedestrian Facilities. Sidewalks shall be provided within multiple-family residential developments connecting building entrances, parking areas, and recreational areas found on-site to one another and to sidewalks or safety paths found within the adjacent road right(s)-of-way. Such sidewalks shall be designed and constructed in accordance with the Charter Township of Oxford Design Standards and Construction Specifications Manual. Safety paths shall also be provided pursuant to Ordinance No. 117.

C. Manufactured Housing Community Regulations. Manufactured housing communities shall be developed in accordance with the Mobile Home Commission Act, P.A. 96 of 1987, as amended, and the rules and regulations promulgated thereunder.

ARTICLE 4
SPECIAL LAND USES

4.1 Intent. In addition to permitted uses specified in each zoning district, there are certain other uses which may be necessary or desirable to allow in certain locations in certain districts. However, due to their impacts on neighboring uses or public facilities, there is a need to carefully regulate them with respect to their location for the protection of the community. These uses may have to be established in a district where they cannot be reasonably allowed as a permitted use without meeting certain specified conditions. It is the intent of this Section to provide the necessary regulations to address such uses, to be referred to as "special land uses." It is further the intent to provide the Planning Commission with a set of standards upon which to make decisions with respect to special land uses.

4.2 Authority. The Planning Commission shall have the power to approve, approve with conditions, or disapprove, all special land uses.

4.3 Application. A request for special land use approval shall be made to the Planning Commission upon an application form provided by the Building Department. Said application for the approval of a special land use shall be made by an owner, lessee or other person with a legal interest in the property and who has the owner's consent, in writing, to file the application.

4.4 Procedures. An application for a special land use shall be processed as follows:

A. The applicant may request a pre-application conference with Township staff.

B. The applicant submits completed application form and a site plan prepared in accordance with Article 12.

C. The Zoning Administrator reviews the proposed application to determine if all required information has been supplied, and then distributes the submitted material to appropriate departments and consultants for review.

D. The submitted material and Township staff and consultant reports are simultaneously distributed to the Planning Commission and Township Board.

E. The Zoning Administrator shall provide notice of a public hearing in accordance with Section 16.9.

F. Review Comments from the Township Board shall be forwarded to the Planning Commission prior the scheduled public hearing.

G. The Planning Commission shall conduct a public hearing.

H. The Planning Commission shall review the special land use request in consideration of the general standards listed in Section 4.5.

I. The Planning Commission, in its sole discretion, shall take one of the following actions:

1. Approve the special land use.

2. Approve the special land use with conditions. Such conditions shall be reasonable and related to the impacts of the proposed use, considered necessary to insure compliance with the standards of this Zoning Ordinance and the criteria for findings of fact listed under Section 4.5, and are hereby determined to be a valid exercise of the police power to protect the health, safety and welfare of adjacent property owners and the Township overall.

3. Table the request and direct the applicant to provide any additional information necessary to make a decision, or direct Township staff to conduct any additional analysis.

4. Deny the special land use request if the Planning Commission determines that the special land use request does not meet the standards of this Zoning Ordinance or the criteria for findings of fact listed under Section 4.5, or will tend to be injurious to the public health, safety and welfare or to the orderly development of the Township.

5. The decision of the Planning Commission shall be incorporated in a statement of conclusions, or “findings of fact”, relative to the special land use under consideration. The statement of conclusions, or “findings of fact”, shall be incorporated in the Planning Commission’s motion, and recorded in the official meeting minutes. Any decision which denies a request or imposes conditions upon its approval shall specify the basis for the denial or the conditions imposed.

4.5 Findings of Fact. The Planning Commission shall review each case individually and make findings of fact relative to the following criteria and, as applicable, the standards contained in Article 5.

A. The proposed special land use must be compatible with adjacent uses of land in terms of location, size and character and will have no negative impact on adjacent property or the surrounding neighborhood; and,

1. Will be designed, constructed, operated, and maintained so as to be harmonious and appropriate in appearance with the existing or

intended character of the general vicinity and will not change the essential character of the area.

2. Will not be hazardous or disturbing to existing uses or uses reasonably anticipated in the future.

3. Will be an improvement in relation to property in the immediate vicinity and to the Township as a whole.

B. The proposed special land use must be consistent with and promote the intent and purpose of this Zoning Ordinance and other applicable codes.

C. The proposed special land use must not pose an unreasonable impact upon the natural environment;

D. The proposed special land use must be compatible with the capacities of public services and facilities affected by the proposed use; and,

1. Will be served adequately by essential public services and facilities or that the persons responsible for the establishment of the proposed use will provide adequately any such service or facility.

2. Will not create excessive additional public costs and will not be detrimental to the economic welfare of the Township.

E. The proposed special land use must be consistent with vehicular turning patterns, traffic flow, intersections, view obstructions, ingresses and egresses, off-street parking and other existing conditions in the district;

F. The proposed special land use must be designed located, planned, and operated, so that the public health, safety and welfare will be protected; and,

G. The proposed special land use must be consistent with the goals, objectives and future land use plan described in the Charter Township of Oxford Master Plan.

4.6 Conditions and Safeguards. The Planning Commission may impose such additional conditions and safeguards deemed necessary for the general welfare, for the protection of individual property rights, and for insuring that the purposes of this Ordinance and the general spirit and purpose of the district in which the special use is proposed will be observed. Such conditions shall conform to the standards found in Section 405 of P.A. 110 of 2006, as the same may be amended or superseded from time to time. The Planning Commission shall summarize the conditions of approval on a form issued by the Zoning Administrator which shall be signed by the Chairperson of the Planning Commission and the applicant.

4.7 Duration of Approval

A. A special land use approval shall be contingent upon the approval of the site plan for the proposed special land use, and the duration of the special land use approval shall be the duration of the site plan approval for the proposed use under Article 12.

B. The Zoning Administrator may suspend or revoke a special land use approval prior to the expiration of its associated site plan approval if the special land use approval had been issued erroneously on the basis of incorrect information supplied by the applicant or his agent and the use is in violation of any of the provisions of this Ordinance or of any other ordinances or regulations of the Township.

4.8 Reapplication. No application for a special use permit which has been denied wholly or in part shall be resubmitted until the expiration of one (1) year or more from the date of such denial, except on grounds of newly discovered evidence or change of conditions found to be sufficient to justify reconsideration by the Planning Commission.

4.9 Appeals. Decisions rendered on special land use permits pursuant to any non-discretionary standard or requirement of this Ordinance may be appealed to the Zoning Board of Appeals, however decisions rendered pursuant to the discretionary standards of Section 4.5 shall not be appealed to the Zoning Board of Appeals.

ARTICLE 5
USE REGULATIONS

5.1 Adult Regulated Uses.

A. Findings and Purpose. The Planning Commission and Township Board of the Township find that adult regulated uses, as defined under Section 2.2 of this ordinance, pose the risk of imposing adverse secondary effects upon the Township and its residents, including but not limited to: increased crime within and in the vicinity of such uses, and the spread of communicable diseases. The Planning Commission and Township Board base this determination upon a review and consideration of the issues concerning adult regulated uses, including, but not limited to, the review and consideration of the experience of the City of Seattle as described in Northend Cinema v. Seattle, 585 P.,2d 1153 (Wash. 1978). Special control of these uses is necessary to insure that the adverse secondary effects of these uses will not interfere with the stable growth and development of the surrounding areas because of their potential disruptive and deleterious effect on adjacent properties, especially when constructed near residential uses and zones. These special controls are itemized in this section. The primary control or regulation is for the purpose of preventing a concentration of these uses in any one (1) area (i.e., not more than two (2) such uses within one thousand (1,000) feet of each other), due to the finding that the concentration of such uses can exacerbate the negative secondary effects of such uses and impair the health, safety, and welfare of surrounding communities and the uses therein.

B. Uses Constituting an Adult Regulated Use. Applicable uses considered under this section are as defined in Section 2.2 of this Ordinance.

C. Special Land Use Approval. All adult regulated uses shall be subject to special land use approval, pursuant to Article 4 of this Ordinance, and as modified by subsection 5.1(G).

D. Required Spacing. Adult regulated uses shall meet all of the following space requirements, measured horizontally between the nearest point of each property line:

1. At least one-thousand (1000) feet from any other adult regulated use;

2. At least five-hundred (500) feet from all churches, convents, temples and similar religious institutions;

3. At least five-hundred (500) feet from all public, private or parochial nurseries, primary or secondary schools, playgrounds, licensed child care facilities, and hospitals;

4. At least five-hundred (500) feet from any one-family or multiple-family residential district or use; and

5. At least five-hundred (500) feet from any pool or billiard hall, coin-operated amusement center, indoor and outdoor recreation, dance club catering primarily to teenagers, movie theaters, and similar uses frequented by children and teenagers.

E. Special Site Design Standards.

1. Maximum size of the building shall be three thousand (3,000) square feet.

2. The building and site shall be designed, constructed and maintained so material such as a display, decoration, or sign depicting, describing, or relating to activities or merchandise within the structure cannot be observed by pedestrians, motorists on a public right-of-way or from an adjacent land use.

3. Adult regulated uses shall be located within a free-standing building. A shared or common wall structure or shopping center is not considered to be a free-standing building.

4. The style, shape and color of the building materials shall be subject to approval by the Planning Commission and Township Board in consideration of the similarity and compatibility of said structure with other structures within a reasonable proximity.

5. Either a landscape screen or a four and one-half (4-1/2) foot high brick or masonry wall shall be constructed to screen the parking lot from the adjacent public rights-of-way.

6. No person shall reside in or permit any person to reside in the premises of an adult regulated use.

7. No person operating an adult regulated use shall permit any person under the age of eighteen (18) to be on the premises of said use either as an employee or customer.

8. Adult regulated uses shall comply with all applicable federal, state, and local licensing regulations. Initial and annual proof of such compliance shall be a condition of special use approval and the continuance thereof.

F. Conditions. Prior to the granting of approval for the establishment of any adult use, the Planning Commission and Township Board may impose any such conditions or limitations upon the establishment, location, construction, maintenance, or operation of the controlled use as in its judgment may be reasonably necessary for the protection of the public interest. A performance guarantee may be required, to ensure that the conditions stipulated in connection therewith will be fulfilled.

G. Review Procedures.

1. Except as modified in this Subsection 5.1(G), the review and approval of proposed adult regulated uses shall be governed by the provisions set forth in this ordinance for the review and approval of any other special land use.

2. Standards for Approval. An application for the approval of an adult regulated use shall be governed by a consideration of the following factors, none of which shall be in isolation determinative except as provided herein:

a. The standards for the approval of a special land use under Article 4.

b. Whether the requirements of Subsections 5.1(D) and (E) are met. These requirements must be met in order for an adult regulated use to be approved and are, accordingly, determinative in isolation.

c. Whether the presence of an adult regulated use at the proposed location would alter the fundamental nature of the neighborhood.

d. Whether the proposed location of the proposed adult regulated use would make the proposed adult regulated use uniquely prone to present negative secondary effects, based on factors including but not necessarily limited to:

1. Whether the physical nature of the surrounding area renders it vulnerable to criminal activity based upon dense vegetation, broken sightlines, erratic lighting, or other factors.

2. Whether the proposed location is situated within or near an area of documented inordinate criminal activity.

3. Whether the proposed location is served by pedestrian access systems that present a risk of spillover effects from inside the proposed adult regulated use, without providing enough consistent foot traffic to counteract any such effects.

e. Whether the proposed layout or configuration of the proposed adult regulated use would make the proposed adult regulated use uniquely prone to present negative secondary effects, based on factors including but not necessarily limited to:

1. Whether the proposed configuration would facilitate the movement of individuals in and out of the proposed use without detection, so as to enable discretely-performed criminal activity.

2. Whether the proposed configuration would tend to facilitate the interaction of persons within the proposed adult regulated use with persons outside the proposed adult regulated use.

f. Whether the proposed adult regulated use would present an undue burden on public services and/or infrastructure, and in particular whether the proposed adult regulated use, in the proposed location, would be prone to create undue traffic congestion after events which are likely to “feed” traffic to an adult regulated use, such as concerts and sporting events. The Planning Commission may require a traffic study as provided in this ordinance.

3. The Township shall review all applications under this Subsection within 30 days of the Township’s receipt of a complete application for approval.

4. Any appeal of a Planning Commission decision under this Subsection to the Zoning Board of Appeals, and any request for a variance, shall be heard by the Zoning Board of Appeals within 30 days of the Township’s receipt of a complete appeal and/or application.

5. The Township shall take all reasonable efforts to ensure the prompt judicial review of any Zoning Board of Appeals decision regarding an application made under this subsection.

5.2 Agribusiness. Agribusiness uses, such as but not limited to, cider mills, farmers markets (not including roadside stands for products grown on the same property), farm dairies, pick-your-own farms, commercial greenhouses, private hunting clubs and game shooting preserves shall be subject to the following standards:

A. All such uses shall be located on a paved, major or secondary thoroughfare unless the use is seasonal in nature and has no permanent buildings for use by the public.

B. All buildings, any equipment, materials or produce being stored or for sale shall be set back from all property lines in accordance with the Schedule of Regulations of Section 3.7 for the district in which the use is located.

C. One (1) non-illuminated sign, not exceeding a total of thirty-two (32) square feet and eight (8) feet in height, is permitted per parcel in single ownership and for all agribusiness uses on that same parcel.

D. Adequate off-street parking shall be provided to serve the expected number of patrons and shall have at least a gravel surface properly graded and dust-free at all times. In determining the adequacy of the number of spaces being proposed, the Planning Commission shall compare the proposed use to similar uses.

E. Whenever the proposed use is adjacent to a district which permits residential uses, a ten (10) foot wide landscaped greenbelt shall be provided along the entire property line between the residential zoning district and the agribusiness use.

5.3 Automobile Service Stations, Convenience Marts, and Repair Establishments. It is the intent of this section to establish standards for automobile service stations, convenience marts and repair establishments to insure that access is managed adequately and to minimize negative impacts on neighboring properties. Such facilities shall not include service or repair of semi's and other heavy trucks, RVs, farm equipment, construction equipment, and the like (See Section 5.18). Automobile service stations, convenience marts, and repair establishments are subject to the following conditions:

A. Such facilities shall not be located within five hundred (500) feet of any school.

B. The minimum lot area for such facilities shall be one (1) acre, with a minimum frontage along the principal street of one hundred-fifty (150) feet. The property shall be so arranged that ample space is available for motor vehicles which are required to wait for services.

C. Access.

1. Ingress and egress points shall be no less than fifty (50) feet from a street intersection (measured from the road right-of-way) or from an adjacent residential property line.

2. The curb cuts for ingress and egress to a service station shall not be permitted at such locations that tend to create traffic hazards on the streets immediately adjacent thereto.

3. All driveways providing ingress to or egress from a filling or service station shall be not more than thirty (30) feet wide at the property line.

4. No more than one curb opening shall be permitted for every hundred (100) feet of frontage or major fraction thereof along any street.

D. Pump islands shall be a minimum of twenty-five (25) feet from any public right-of-way or lot line and shall be arranged so that motor vehicles do not park upon or overhang any public sidewalk, street or right-of-way while waiting for or receiving fuel service. Overhead canopies shall be setback at least fifteen (15) feet from the public right-of-way.

E. Retail sale items such as soda pop, windshield solvent, landscape mulch or other merchandise shall not be displayed or sold outside.

F. Outdoor storage or parking of vehicles, except for two (2) private automobiles per indoor stall or service area of the facility, shall be prohibited between the hours of 10:00 p.m. and 8:00 a.m. Vehicles which are awaiting service shall remain on-site for not more than seventy-two (72) hours. No outside storage of tires and other parts and accessories and partly dissembled or junked vehicles shall be allowed.

G. All outdoor areas used for the storage of motor vehicles waiting for service shall be effectively screened from view from abutting properties and public streets. Such screening shall consist of a solid masonry screen, with an opaque gate. Such screening device shall not be less than six (6) feet in height. Parking areas for employees and customers shall be separate and apart from the storage area.

H. Any work including repairs, servicing, greasing and/or washing motor vehicles shall be conducted within an enclosed building.

I. Storage or parking of vehicles within the front setback shall be prohibited.

J. Storage of vehicles without current license plates shall be prohibited.

K. Tow trucks or other commercial vehicles that are on the premises for reasons other than typical customer activity shall be parked in non-required

parking spaces and should not be parked in such a manner to be used as an advertisement.

L. The exterior of the main building shall be harmonious with its surroundings and shall include some brick, stone, wood, or other masonry finished building materials other than glass and metal. The canopies shall be designed within a minimum height of twelve (12) feet, and a maximum height of fifteen (15) feet, and the building materials and architectural style of the canopy shall be related to or directly match that of the main building.

M. The outdoor use of any electronic or enhanced sound or public announcement system shall be limited to the hours of 8:00 a.m. and 6:00 p.m. Such a system shall not be directed toward adjacent residentially zoned or used property, and shall generally not present an unreasonable disturbance to the neighborhood in which it is located.

N. The installation and use of an oil-water separator with monitoring capabilities in the facility's stormwater management system may be required.

O. Separation shall be made between the pedestrian sidewalk and vehicular parking and maneuvering areas with the use of curbs, greenbelts and/or traffic islands.

P. Vehicle sales shall not be permitted on the premises.

5.4 Automobile Washes. Vehicle washes facilities shall conform to the following conditions:

A. All washing facilities shall be within an enclosed building.

B. Vacuuming and drying areas may be located outside the building but shall not be in the required front yard and shall not be closer than one hundred (100) feet from any residential district. Noise from vacuuming or blow drying equipment shall be controlled by appropriate enclosures or sound barrier walls. All noise from such equipment shall comply with Township noise regulations.

C. Adequate waiting spaces shall be provided for vehicle stacking, in accordance with Section 8.7(H).

D. Ingress and egress points shall be no less than fifty (50) feet from a street intersection (measured from the road right-of-way) or from an adjacent residential property line.

E. Exit lanes shall be sloped to drain water back toward the wash building and into drainage gates.

F. A masonry screen wall of at least four (4) feet but no more than six (6) feet in height shall be provided where such facilities abut a residential district.

5.5 Bed and Breakfast Establishments. Bed and breakfast establishments are subject to the following conditions:

A. There shall be no exterior alterations to the dwelling that are not customary for other principal single family residences in the Township. If guest rooms are not part of the original structure but are proposed to be added, plans prepared by a Registered Architect shall be submitted to the Planning Commission for approval which demonstrate the following:

1. The addition is compatible in style and design with the original structure; and

2. The rooms proposed to be added could be incorporated into the structure for single family residential use in the future, if the owner chooses to terminate the use of the dwelling as a Bed & Breakfast Establishment.

B. Two (2) off-street parking spaces for the dwelling and one (1) for each double-occupancy room shall be provided. All off-street parking shall be located in the side or rear yard and designed to maintain the Residential character of the principal use. To that end, parking "lots" are to be avoided and the use of grass pavers or similar materials is encouraged.

C. One (1) non-illuminated sign, not to exceed four (4) square feet and stating only the name of the Bed and Breakfast establishment, may be displayed flat against the wall of the building.

D. The maximum length of stay of any guest(s) shall be fourteen (14) days.

E. The applicant shall submit proof of the health department's evaluation of the adequacy of the on-site sewage disposal system, in relation to the number of guest rooms proposed, in addition to the principal residential use.

F. All requirements of this ordinance and any conditions imposed by the Planning Commission shall apply equally to the original applicant and any subsequent owner(s). The owner of a bed and breakfast establishment shall notify the Township in writing thirty (30) days in advance of the proposed sale of the bed and breakfast establishment. The name, address, and phone number of the new owner(s) shall be provided with the notice of proposed sale.

G. All bed and breakfast establishments shall be inspected by the Township Zoning Administrator, Building Inspector, and Fire Chief. A report from

each shall be submitted to the Planning Commission identifying all zoning, building, fire, and safety code issues.

H. No accessory building or garages are to be utilized for sleeping rooms.

I. Kitchen facilities shall be used for food preparation for consumption on the site by the owner, operator, residents and overnight bed and breakfast guests only. No food shall be prepared which is taken off-site or which is served to persons other than residents and overnight guests.

J. No cooking facilities are permitted for use by the guests.

K. A fire escape plan shall be developed and graphically displayed in each guest room.

L. Bed and Breakfast Residences and Inns, in addition to standards outlined above shall meet or exceed the following:

1. When combined with the owner's residence, the Bed and Breakfast Residence or Inn shall be clearly subordinate to the use of the building as the owner/operator's principal residence; and

2. Not more than forty (40) percent of the gross floor area of the dwelling may be devoted to guest rooms.

M. Bed and Breakfast Hotels, in addition to the standards outlined above, shall meet or exceed the following:

1. Site plan review by the Planning Commission shall be required in accordance with Article 12; and

2. Required parking shall be exempt from required paving. However, all parking areas shall be gravel or crushed stone and shall be located in the side or rear yard behind the front building setback line.

5.6 Campgrounds, Recreational Vehicle Parks. It is the intent of this section to establish standards for publicly or privately-owned and operated campgrounds and camp buildings providing temporary living quarters for campers on a daily, weekly or seasonal basis subject to the following conditions:

A. The minimum site area shall be twenty (20) acres.

B. The site shall have direct access to a public road.

C. A minimum one hundred (100) feet setback shall be established around the perimeter of the property for the purpose of buffering a private campground or recreational vehicle park in relation to adjacent residentially zoned or used properties. The perimeter buffer shall be kept in its natu-

ral state. Where natural vegetation or land contour are insufficient to buffer a private campground or recreational vehicle park in relation to surrounding properties, the Township may require additional setbacks, landscaping and/or berming.

D. Temporary campgrounds are strictly prohibited.

E. Manufactured (mobile) homes shall not be permitted to be located within a campground.

F. The use and occupancy of a campground shall be in strict compliance with the current laws and requirements of the State of Michigan governing such uses.

G. Any proposed sound system shall be reviewed by the Planning Commission to ensure that it does not impact adjacent land uses. In no case shall outdoor speakers be directed towards residentially zoned or used property.

H. Each site on a lot designated for camping use may accommodate a travel trailer or tent or recreational vehicle and shall be provided with individual electrical outlets. Animal-proof waste containers shall be provided at each site.

I. Adequate public sanitary facilities housed in all-weather structures containing adequate water outlet, toilet and waste containers, shall be provided uniformly throughout the campground at ratio of not less than one (1) such station per each twenty (20) camping sites.

J. Each campground containing more than sixty (60) sites shall provide a masonry building containing machine laundry (wash and dry facilities) and showers.

K. No commercial enterprises shall be permitted to operate on the lot, except that a convenience goods shopping building may be provided on a lot containing more than eighty (80) sites.

L. Each lot shall provide a hard surfaced, dust-free vehicle parking area for site occupant and guest parking. Such parking area shall be located within four hundred (400) feet of the site it is intended to serve (except in the case of sites specifically designated only for tent camping). Each parking space shall be two hundred (200) square feet in area and guest parking shall be provided at the ratio of not less than one (1) space per each two (2) sites. Occupant parking space for two (2) vehicles shall be provided on each site.

M. Each site shall contain a minimum of one thousand five hundred (1,500) square feet, except that the minimum size for sites specifically designated

for tents shall be three thousand (3,000) square feet. Each site shall be set back from any right-of-way or property line at least seventy-five (75) feet, and from any private street at least forty (40) feet.

N. A common use area shall be provided on each lot at a ratio of not less than one thousand (1,000) square feet of such area per each site. This common area shall be developed by seeding, landscaping and provided with picnic tables, barbecue stands and passive recreation equipment (i.e., swings, horseshoe pits, shuffleboard courts and the like) for the general use of all occupants of the entire lot.

O. Each travel trailer site shall have direct access to a hard surfaced, dust-free roadway at least twenty-four (24) feet in width for two-way traffic and twelve (12) feet in width for one-way traffic. Parking shall not be allowed on any roadway. Interior streets shall be hard surfaced. Sites specifically designated for, and only used for tent camping need not have direct vehicular access to any street or road, but shall be provided with adequately cleared and marked pedestrian pathway access which originates at a point on a street or road within two hundred (200) feet of the parking area mentioned in sub-section (L).

P. Any open drainage-ways must have seeded banks sloped at least three to one (3:1) and designed to properly drain all surface waters into the county drain system, subject to approval by the Oakland County Drain Commissioner.

Q. All sanitary facilities shall be designed and constructed in strict conformance to all applicable Oakland County Health Department Regulations.

R. A minimum distance of fifteen (15) feet shall be provided between all travel trailers or tents or recreational vehicles.

S. Fences and greenbelts may be required by the Planning Commission. The location of common use areas, roadways, streets and building shall be subject to approval by the Planning Commission.

T. There will be no permanent storage of tents, campers, or travel trailers.

5.7 Caretaker's Quarters. One (1) caretaker's residence may be permitted in the SF-3, AG, R, I-1 and I-2 zoning districts subject to the following:

A. Where a caretaker's residence will be located within or attached to a permitted agricultural building, it shall not be constructed prior to a permanent residence on the same parcel.

B. Where a caretaker's residence will be located as a separate building on the property, it shall meet all requirements of Sections 3.7 and 3.8(A) for lot size, house size, setbacks, and height limits. This shall be construed to

require a minimum parcel size of ten (10) acres where a caretaker's residence will be a separate building on agricultural property.

C. Caretaker's residences shall be used solely for a watchman, caretaker or custodian of the facility or use on the same site.

D. The caretaker's residence shall be clearly incidental and accessory to the permitted principal use(s) on the same parcel. If the use(s) to which the caretaker's residence is accessory change or cease, the applicant shall demonstrate the need to continue the caretaker's residence for the new use or convert the caretaker's residence into a permitted principal use.

E. In the case of industrial properties, the caretaker's residence shall be detailed clearly on all site plans and building plans and attached to a primary building structure.

F. The Zoning Official may require periodic inspections to ensure conformance with the provisions of the special land use permit.

5.8 Cement and Asphalt Mixing Plants. Cement and asphalt mixing plants shall be designed, constructed and maintained in accordance with the following conditions:

A. All such uses shall be located on a paved public road capable of carrying class A loadings, as defined by the Oakland County Weighmaster, on a year-round basis.

B. All such uses shall keep internal roads and operations areas dust free at all times. No dust or other particulate emissions shall be permitted beyond the property line.

C. All site access roads, drives and employee parking areas shall be paved with asphalt or concrete. Internal haul roads which access bulk storage areas may be unpaved.

D. All bulk material storage areas shall be screened from view of adjoining residential zoned property in accordance with Section 7.4(E)(1) wherever the proposed use abuts residential zoned parcels and adjacent public rights of way.

E. All such uses shall conform with the Environmental Performance Standards of Article 10.

F. All outdoor bulk storage areas and truck storage areas shall be setback a minimum one hundred (100) feet from any property line. All mixing plants shall be set back a minimum two hundred fifty (250) feet from any property line.

5.9 Cemeteries.

A. All new cemeteries and expansions of existing cemeteries shall be designed and constructed in accordance with the applicable regulations of the State of Michigan and the following standards:

Site Size	Minimum Setback From Any Property Line To:		
	Burial Plots	**Service Buildings / Mausoleums**	**Outdoor Storage / Service Yards**
< 5 Acres	10’	50’	50’
5-20 Acres	20’	75’	75’
>20 Acres	25’	100’	100’

B. All service and storage yards shall be screened from view by an obscuring wall or fence, or a landscaped buffer, as approved by the Planning Commission in accordance with Section 7.4(E)(1).

C. On all sides abutting property in a zoning district that permits residential uses, there shall be a landscaped greenbelt at least equal to the width of the setback required for burial plots in sub-section A., above.

D. Parking shall be provided in parking lots, parking bays, or along interior roadways. No cemetery parking shall be permitted in public or private road rights-of-way.

5.10 Churches, Houses of Worship. It is the intent of this section to establish standards for churches and other houses of worship which are subject to the following:

A. The site shall have direct access to a County Primary Road.

B. Ancillary Facilities. Whenever facilities such as community halls, fellowship or social halls, recreation facilities and other similar uses are proposed as incidental to the principal church or worship facility use, such secondary facilities shall not be constructed or occupied in advance of the sanctuary or principal worship area of the church complex.

1. The seating capacity of such incidental use areas shall not exceed that of the sanctuary or principal worship area of the church complex.

2. Such incidental facilities must be used for church, worship, or religious education purposes, in a manner which is consistent with residential zoning and compatible with adjacent residential property. They shall not be used, leased, or rented for commercial purposes.

5.11 Commercial Indoor Recreation. Indoor commercial recreational uses include, but are not limited to: bowling alleys, ice or roller blade rinks, firearm ranges, indoor soccer facilities and racquet courts, and athletic clubs. Such uses are subject to the following regulations:

A. The site shall be located on, or shall have principal access from a major thoroughfare, or county primary road.

B. New buildings shall be not be located within fifty (50) feet of a lot line of adjoining residentially zoned or used property. The setback does not apply to commercial indoor recreational uses that may be located in existing buildings.

C. Required parking must be provided on site. Whenever parking areas are adjacent to residentially zoned or used land, a masonry screen wall of at least four (4) feet and no more than six (6) feet in height shall be provided along the side of the parking area adjacent to the residentially zoned or used land.

D. Based on the nature of the use and nuisance potential to adjoining property owners, the Planning Commission may stipulate noise standards beyond those stipulated otherwise in this Ordinance.

E. Operating hours for all uses shall be determined by the Planning Commission based on the nature of the use and the nuisance potential to adjoining property owners.

5.12 Commercial Outdoor Recreation. Outdoor commercial recreation uses shall include, but not be limited to: archery, miniature golf, animal racing, go-cart, automobile or motorcycle racing, off-roading or mud bogging, amusement and water parks, drive-in theaters, golf driving range, fairgrounds, batting cages, and skateboard parks. Outdoor shooting ranges, gun clubs, and paintball or survival games are intentionally excluded from the preceding list, and are regulated separately under Section 5.31. Commercial outdoor recreational uses are subject to the following conditions:

A. The site shall be located on, or shall have principal access from a county primary road or other major thoroughfare.

B. All points of entrance or exit shall be no closer than two hundred (200) feet from the intersection of any two streets or highways.

C. No drive shall be closer to another drive by less than seventy-five (75) feet and the maximum number of drives shall be two (2).

D. Minimum site area shall be based on the underlying district. However, the Planning Commission may increase the minimum required site area depending upon the described use and anticipated extraneous impacts on

adjacent properties. Such an increase will be for the purposes of buffering, screening and otherwise negating or limiting the potential nuisance to adjacent properties caused by noise, dust, odor and the like. To this end, the Planning Commission and Township Board may require additional information concerning the proposed use and the potential for nuisance.

E. No building or spectator seating area shall be located within one hundred (100) feet of a lot line of an adjoining residentially zoned or used property.

F. A landscaped buffer strip of no less than one hundred (100) feet shall be provided along the property lines of all residentially zoned or used land. However, the Planning Commission may reduce such requirement by up to fifty (50) percent if it is determined that the potential for off-site nuisance is limited, such as in the case of a miniature golf course.

G. Whenever parking areas are adjacent to residentially zoned or used land, a masonry screen wall of at least four (4) feet and no more than six (6) feet in height shall be provided along the side of the parking area adjacent to the residentially zoned or used land.

H. Race tracks of any sort shall be enclosed around the entire periphery with an obscuring wall of at least eight (8) feet in height.

I. Golf driving ranges shall be at least two hundred (200) feet from any residential building, and site size shall be sufficient to retain errant balls within the site. Netting shall be prohibited unless the Planning Commission determines the netting would be compatible with surrounding uses. The maximum height of any approved netting shall be thirty (30) feet, set back at least sixty (60) feet from a property line.

J. Central loudspeakers/paging systems are prohibited within two hundred (200) feet of residentially planned, zoned or used property. Such systems shall not be directed toward a residential area even if outside the two hundred (200) foot setback.

K. Accessory retail or commercial facilities, such as food and beverage facilities or equipment shops, shall be designed to serve only the patrons of the outdoor recreation facility, unless otherwise listed as a permitted use in the district in which the facility is located.

L. Operating hours for all uses shall be determined by the Planning Commission and Township Board based on the nature of the use and the nuisance potential to adjoining property owners.

M. An outdoor lighting plan shall specify the type of fixtures to be used, light intensity, and method of shielding the fixtures so that light does not project onto adjoining properties or interfere with driver visibility on any public or private street or public right-of-way.

5.13 Community Building or Lodge Hall. A community building or lodge hall of a social or civic club or organization shall be subject to the following standards:

A. The use shall have direct access to a County Primary Road.

B. All parking areas shall be screened from an abutting district that permits residential dwellings by a four (4) foot six (6) inch high masonry screen wall.

C. If the community building or lodge hall will be made available to private groups or individuals on a rental or other basis, the Planning Commission shall determine that the surrounding area will be protected from adverse impacts with regard to the following criteria:

1. Hours of operation.

2. Capacity of the facility and anticipated traffic volumes to be generated in relation to the hours of operation.

3. Location and method of screening outdoor trash storage areas and provisions to control odors.

4. Location and arrangement of the building on the site in relation to the need to control excessive noise within the neighborhood.

5.14 Convalescent or Nursing Home. A convalescent or nursing home is subject to the following conditions:

A. All vehicular ingress and egress shall be directly onto a County Primary Road.

B. The minimum land area per person cared for shall be three thousand (3,000) square feet.

C. All buildings shall be set back at least seventy-five (75) feet from all property lines.

5.15 Day Care Facilities, State Licensed. All state-licensed day care facilities**,** shall meet the following standards:

A. Child Care and Adult Day-Care Centers (see definition of *Daycare Facilities, State Licensed*). Child care centers and adult day care facilities shall be subject to the following minimum standards:

1. A site plan, prepared in accordance with Article 12 shall be required to be submitted.

2. Outdoor play/recreation areas shall be required as follows:

a. For each person cared for, there shall be provided and maintained a minimum of one hundred fifty (150) square feet of outdoor recreation area, except as provided below under Section 5.15(A)(2)(b).

b. The required outdoor play area shall have a total minimum area of not less than three thousand (3,000) square feet, but in no case shall the Township require the outdoor play area to be greater than the total square footage of the proposed building.

c. The outdoor play area shall be located in the side or rear yard, shall be fenced and shall be made and kept safe by the care-givers.

3. The facilities shall not exceed sixteen (16) hours of operation during a twenty-four (24) hour period. Unless good cause is otherwise provided to the Planning Commission, a day care facility's hours of operation shall be limited to between 6:00 a.m. and 10:00 p.m.

4. Operator must be licensed by the Michigan Department of Social Services.

5. A compliance permit must be obtained from the Building Department before operation commences, compliance must be continuous.

6. A child care and adult day-care center shall comply with all fire and traffic safety standards set by the Michigan Department of Social Services and the Charter Township of Oxford Fire Department and Oakland County Sheriff.

7. Care-givers shall maintain control of noise to protect the surrounding neighborhood.

8. All day care centers shall be currently registered with the 911 Dispatch Center on forms provided by said Center.

9. License holder and all employees shall be subject to a background check and approval by the Oakland County Sheriff.

B. Adult and Child Group Day Care Homes Centers (see definition of *Day-care Facilities, State Licensed*). Adult and child group day care homes are subject to the following minimum standards, in accordance with Section 206 of the Michigan Zoning Enabling Act, P.A. 110 of 2006, as amended:

1. A site plan, prepared in accordance with Article 12 shall be required to be submitted.

2. A group day care home shall not be located closer than one thousand five hundred (1,500) feet to any of the following:

   a. Another licensed group day care home.

   b. An adult foster care small group home or large group home licensed by the State of Michigan.

   c. A facility offering substance abuse treatment and rehabilitation service to seven (7) or more people licensed by the State of Michigan.

   d. A community correction center, resident home, halfway home or other similar facility that houses an inmate population under the jurisdiction of the Department of Corrections.

3. Outdoor play/recreation areas shall be securely fenced, located in the side or rear-yard, and shall be made and kept safe by the caregivers.

4. The property must be maintained consistent with the visible characteristics of the neighborhood.

5. Signage shall be allowed in accordance with the standards for home occupation contained in Section 9.7(C).

6. Drop-offs and loading shall be arranged to allow maneuvers without affecting traffic flow on the public street.

7. The facilities shall not exceed sixteen (16) hours of operation during a twenty-four (24) hour period. Unless good cause is otherwise provided to the Planning Commission, a group day care's hours of operation shall be limited to between 6:00 a.m. and 10:00 p.m.

5.16 Foster Care Facilities, State Licensed.

A. Adult Foster Care Group Homes Centers (see definition of *Foster Care Facilities, State Licensed*). Adult foster family small and large group homes are subject to the following minimum standards:

   1. A site plan, prepared in accordance with Article 12 shall be required to be submitted.

   2. A minimum outdoor area of five hundred (500) square feet shall be provided on the same premises as the facility shall be provided. This open space shall be securely fenced and screened, located in the side- or rear-yard, and shall be made and kept safe by the caregivers.

3. The property shall be maintained in a manner that is consistent with the character of the neighborhood.

4. One (1) parking space per employee and/or caregiver at the peak shift shall be provided.

5. Appropriate licenses with the State of Michigan shall be maintained.

6. The property and facilities shall be so constructed, arranged, and maintained as to provide adequately for the health and safety and welfare of all occupants.

7. A group foster care home shall be inspected and approved for fire safety prior to the issuance of an occupancy permit and shall be inspected at least annually.

8. Signage shall be allowed in accordance with home occupation standards of Article 9.

B. Adult Foster Care Congregate Facilities Centers (see definition of *Daycare Facilities, State Licenced*). Adult foster care congregate facilities are subject to the following minimum standards:

1. A site plan, prepared in accordance with Article 12 shall be required to be submitted.

2. Parking requirements as required for convalescent homes and similar facilities, set forth in Article 8 shall be met.

3. All landscape requirements set forth in Section 7.3(A) or (C), as appropriate, shall be met.

4. Appropriate licenses with the State of Michigan shall be maintained.

5.17 Golf Courses, Country Clubs, and Swim Clubs. The following conditions shall apply to all golf courses, country clubs, and swim clubs:

A. Golf courses may also include accessory clubhouses, driving ranges, pro shops and maintenance buildings.

B. Country clubs and swim clubs may also include accessory clubhouses, restaurant facilities, and maintenance buildings.

C. The location of structures, such as the clubhouse and accessory buildings, and their operations shall be reviewed by the Planning Commission to insure minimum disruption of the adjacent properties. In no case shall any structure be located any closer than fifty (50) feet from adjacent residentially zoned or used property.

D. All storage, service and maintenance areas, when visible from adjoining residentially zoned or used land, shall be screened from view in accordance with Section 7.4(E)(1).

E. Proposed loudspeaker systems shall be reviewed by the Planning Commission to ensure that it does not impact on adjacent land uses. In no case shall outdoor speakers be directed towards residentially zoned or used property.

F. The site plan shall illustrate expected trajectory or ball dispersion patterns along fairways and for driving ranges where adjacent to residential uses, buildings, parking lots or public streets to demonstrate the design will comply with accepted design practices and ensure public safety to a reasonable degree.

G. Site size shall be sufficient to retain errant balls within the site. Netting shall be prohibited unless the Planning Commission determines the netting would be compatible with surrounding uses. The maximum height of any approved netting shall be thirty (30) feet, set back at least sixty (60) feet from a property line.

H. The Planning Commission may restrict lighting and hours of operation for a driving range in consideration of surrounding land uses and zoning. A lighted driving range is prohibited if the site abuts land zoned or used for residential purposes.

I. Any accessory driving range shall be at least two hundred (200) feet from any residential building.

J. Tee areas for a driving range shall be clearly distinguished either by separated walls or the ground elevated between one and one-half (1/2) inches to six (6) inches.

5.18 Heavy Vehicle and Equipment Repair Establishment. Heavy vehicle and equipment repair establishments include those businesses where service and repair is the primary activity and includes the servicing and repair of semi's and other heavy trucks, RVs, farm equipment, construction equipment, and the like, and shall not apply such activities performed on automobiles (See Section 5.3). In addition to other regulations set forth in this Ordinance, all heavy vehicle and equipment repair establishments shall conform to the following requirements:

A. Such facilities shall not be located within five hundred (500) feet of any school.

B. The minimum lot area for such facilities shall be one (1) acre, with a minimum frontage along the principal street of one hundred-fifty (150) feet.

C. The portion of the property used for vehicular traffic, including parking, shall be separated from landscaped areas and sidewalks by a curb.

D. The entire area used for vehicle service shall be paved.

E. Hydraulic hoist, service pits, lubricating, greasing, washing and repair equipment and operations shall be located within a completely enclosed structure.

F. Access.

1. Ingress and egress points shall be no less than fifty (50) feet from a street intersection (measured from the road right-of-way) or from an adjacent property line.

2. The curb cuts for ingress and egress to a service station shall not be permitted at such locations that tend to create traffic hazards on the streets immediately adjacent thereto.

3. All driveways providing ingress to or egress from a filling or service station shall be not more than thirty (30) feet wide at the property line.

4. No more than one curb opening shall be permitted for every hundred (100) feet of frontage or major fraction thereof along any street.

G. The distance between curb cuts shall be no less than forty (40) feet, measured between the tangent points of the drive edges and the street curb returns.

H. Outdoor storage of trash, including new or discarded vehicle parts, shall be contained within a solid, unpierced enclosure.

I. Outdoor storage or parking of vehicles, except for three (3) vehicles per stall or service area of the facility, shall be prohibited between the hours of 10:00 p.m. and 8:00 a.m. Vehicles which are awaiting service shall remain on-site for not more than seven (7) days.

J. Storage or parking of vehicles within the front setback shall be prohibited.

K. Storage of vehicles without current license plates shall be prohibited.

L. Vehicle and equipment sales, new or used, shall not be permitted on the premises.

M. The installation and use of an oil-water separator with monitoring capabilities in the facility's stormwater management system shall be required, as

well as the use of best management practices for pollution prevention for vehicle service operations, in order to protect surface water and ground-water quality.

5.19 Horse Riding Stables and Sales Barns. Horse riding stables and sales farms (as defined in Section 2.2) shall conform to the following provisions, unless exempted pursuant to the Right to Farm Act:

A. All buildings, corrals, or other enclosures for animals shall be set back at least 250 feet from off-site residential structures.

B. The entire area of the site used for riding shall be fenced to prevent horses and riders from entering adjoining properties.

C. There shall be no storage of customers' trailers or other vehicles for transporting horses except in a completely enclosed building.

D. Adequate off-street parking shall be provided for customers in the ratio of one space for every horse boarding stall. All parking areas shall be screened from view of an abutting residential use by either a greenbelt, obscuring fence, or masonry wall, whichever is determined by the Planning Commission to be the most appropriate and effective.

E. Lighting associated with such facilities shall conform to the lighting requirements of Section 10.2.

F. Central loudspeaker systems are prohibited within two hundred fifty (250) feet of residentially planned, zoned or used property. Such systems shall not be directed toward a residential area even if outside the two hundred fifty (250) foot setback.

G. The site shall be located on a County road.

5.20 Hospitals. The following conditions shall apply to all hospitals and similar facilities:

A. All hospitals shall be developed on sites consisting of at least five (5) acres for the first one hundred (100) beds or less plus one (1) acre for each additional twenty-five (25) beds.

B. The proposed site shall have frontage on and vehicular access to a paved County Primary Road.

C. The site plan shall show that a proper relationship exists between the major thoroughfare and any proposed service roads, driveways and parking areas to insure pedestrian and vehicular traffic safety.

5.21 Junk Yard, Auto Salvage, Wrecking Yard, and Recycling Operations. In addition to other regulations set forth in this ordinance, all automobile junk yards, auto salvage operations, wrecking yards, recycling facilities and similar uses shall conform to the following requirements:

A. Minimum lot size shall be five (5) acres.

B. Direct ingress and egress shall be from a paved road.

C. Travel routes for trucks entering and leaving the yard shall be shown on a map of the Township at the time of application for the special use permit. Such routes except arterial streets or their equivalent shall not pass through residential areas.

D. The required site plan shall also contain a description of the location and nature of any materials processing operations to be conducted within the yard, and the location and nature of equipment for such operations.

E. Yard materials shall be stored in organized rows with open intervals at least twenty (20) feet wide between rows for purposes of fire protection, emergency access and visitor safety.

F. Yard materials shall not be stored in piles higher than the top of the fence surrounding the yard. Automobiles, trucks, and other vehicles shall not be stacked to a height or in a manner that prohibits fire protection, emergency access or does not protect the safety of visitors.

G. The yard shall be maintained in such a manner as to prevent the breeding or harboring of rats, insects, or other vermin.

H. The yard, when established and located within one thousand (1,000) feet of any existing residential district or land being used for residential purposes, as measured on a straight line distance, shall not be open for business and shall not operate at any time other than between the hours of 7:00 a.m. and 6:00 p.m. on weekdays; between 7:00 a.m. and 12:00 noon on Saturdays.

I. All flammable liquids contained in automobiles and other vehicles shall be drained from the same immediately after such vehicles are brought to the yard. Such liquids shall be temporarily stored in containers approved by the local fire authority until properly disposed of according to law. The applicant shall provide a written procedure for draining, storage and disposal.

J. All drives, parking areas, and loading/unloading areas shall be paved, watered, or treated so as to limit nuisances caused by dust on neighboring properties and public roads.

K. No portion of the building, yard or other site elements shall project into the required front yard setback.

L. There shall be not more than one (1) entranceway from each public street that adjoins the yard.

M. Fencing shall be required as follows:

1. A solid, screen-type fence or wall, seven (7) feet in height, shall be provided along each public street frontage. The fence or wall shall be located at or behind the required front setback line. Gates shall also be made of solid, opaque material. The front yard shall be landscaped and continuously maintained as a lawn.

2. Where the yard is adjacent to non-industrially used or zoned property, a solid, screen type fence or wall, seven (7) feet in height, shall be provided on any side or rear property line or portion thereof, adjoining such lots.

3. Where the yard is adjacent to any lot within an industrial district, a chain-link fence six (6) feet in height shall be provided on any side or rear property line or portion thereof, adjoining such lots.

4. Strips of metal, plastic or other materials inserted into wire fences shall not be permitted in any fence enclosing a yard.

5. All gates, doors, and access ways through said fence or wall shall be of solid, unpierced materials matching the required fencing.

N. Wrecking and processing operations are permitted in a yard but shall be described in the application for the site plan approval or special use permit so that the Planning Commission and Township Board can implement standards and conditions to protect the health, safety and welfare of the community.

O. To protect groundwater resources in Oxford Township, all areas for dismantling shall be fully enclosed, and situated on a paved surface that includes a system for collecting spills of automotive and automotive-type fluids to be contained and recycled or disposed of in accordance with State and Local Law.

P. There shall be no burning of anything permitted on-site.

5.22 Kennels.

A. Commercial Kennels. Commercial kennels shall adhere to the following standards:

1. Pens and runs shall be located no closer than one hundred fifty (150) feet to any property line abutting a zoning district that permits residential dwellings.

2. All runs and breeding areas shall be enclosed by a fence, and screened from view from the public road right-of-way and adjacent residentially zoned or used properties.

3. All animals shall be adequately housed, fenced and maintained so as not to constitute a public or private nuisance. The premises shall be maintained in such a manner so as not to be harmful to surrounding properties, or create any hazard or detriment to public health, safety, or general welfare.

4. Commercial kennels housing more than ten (10) animals shall provide one (1) off-street parking space for each five (5) kennel runs. At a minimum, two (2) off-street parking spaces shall be provided for any commercial kennel.

5. All noise shall be controlled in accordance with the noise standards of Section 10.1(J) of this ordinance.

6. Any use permitted by the Township under this section shall terminate immediately when the lot area requirements herein set forth are decreased in any manner or the provisions of this ordinance violated.

7. The site plan submitted for approval of a proposed kennel shall detail all existing and proposed buildings, runs, pens or other outdoor use areas and clearly label the proposed use of each.

8. Commercial kennels shall abut a County Primary road.

9. All commercial kennels shall be operated in accordance with all applicable County and State regulations.

B. Private Kennels. Private kennels shall adhere to the following standards:

1. All runs and breeding areas shall be enclosed by a fence, and screened from view from the public road right-of-way and adjacent residentially zoned or used properties.

2. All animals shall be adequately housed, fenced and maintained so as not to constitute a public or private nuisance. The premises shall be maintained in such a manner so as not to be harmful to surrounding properties, or create any hazard or detriment to public health, safety, or general welfare.

3. All noise shall be controlled in accordance with the noise standards of Section 10.1(J) of this ordinance.

4. Any use permitted by the Township under this section shall terminate immediately when the lot area requirements herein set forth are decreased in any manner or the provisions of this ordinance violated.

5. The site plan submitted for approval of a proposed kennel shall detail all existing and proposed buildings, runs, pens or other outdoor use areas and clearly label the proposed use of each.

5.23 Landfills, Dumping and Sewage Disposal Facilities.

A. General Requirements.

1. Design and Operation Standards. Any such use shall conform to current standards established by the U.S. Environmental Protection Agency, Michigan Department of Environmental Quality, Michigan Department of Agriculture, and other regulatory agencies, in addition to other regulations of the Township.

2. Environmental Impact Statement. An environmental impact statement shall be prepared in accordance with Section 6.10, and submitted for Planning Commission review.

B. Landfills and Dumping.

1. Intent. These regulations are established to control the storage, piling, placing or dumping of garbage, sewage, refuse, trash, debris, rubbish, or other waste in the Township, including landfills.

2. Scope of Application. No person shall pile, place, store, dump, bury, dispose of, or keep in open containers on any land within the Township any garbage, sewage, refuse, trash, debris, rubbish or other solid waste, including cans, bottles, waste paper, cartons, boxes, crates, or other offensive or obnoxious mater, except in strict conformity with the provisions of this Ordinance.

3. Exceptions. These provisions shall not prevent the reasonable use of fertilizers, manure and similar materials for improvement of land being lawfully utilized for farming purposes, provided that such use

is carried out in a healthy and sanitary manner without creating a nuisance to the surrounding area.

C. Permit Requirements for Landfills and Dumping.

1. Issuance. A permit shall be required in all instances where landfill or dumping activity is proposed in the Township.

2. Review Procedures. Applications for landfill or dumping permits shall be reviewed in accordance with the procedures for review of special land uses in Article 4. Permits for such uses shall be issued by the Township for a one (1) year period. Permits may be renewed for one (1) year periods unless the owner or operator violates any conditions of approval.

3. Performance Guarantee.

a. To assure conformance with the requirements specified herein, the Township may require the applicant or owner to provide a performance guarantee, in accordance with Section 16.8. The performance guarantee shall be held in escrow, and may be released to the applicant in proportion to the work completed on the various restoration activities, provided an inspection report has been submitted to the Township Engineer and approved by the Township Board. No more than ninety percent (90%) of the performance guarantee shall be returned until all work has been completed and inspected.

b. The amount of the performance guarantee shall be reevaluated on an annual basis when the permit is renewed to insure that it is adequate to complete the project as proposed, based on current construction costs.

c. The Township Board may approve a performance guarantee that covers less than the total site, provided that no excavation or dumping may take place in an area until a performance guarantee has been submitted to assure proper completion of the activities proposed for the area.

4. Application Requirements. The following information shall be provided on an application for a landfill or dumping permit:

a. Aerial Photography. Vertical aerial photography of the site, enlarged to a scale of one (1) inch equals two hundred (200) feet. The aerial photograph shall include all land included in the application, all contiguous land which is proposed to be

used or has been used by the owner or operator, and all surrounding public roads.

b. Survey. A metes and bounds survey survey o fthe subject site, prepared by a registered land surveyor and drawn to a scale of one (1) inch equals two hundred (200) feet. The survey shall include the boundary of the entire site and topography of the site at two (2) foot contour intervals.

c. Engineering Report. Report by a qualified soil scientist, soils engineer, or geologist regarding the effect of the proposed operation on the watershed of the area. Particular attention should be focused on the potential pollution or contamination of groundwater.

d. Master Plan. A detailed plan for the landfill, including a timetable for various stages of the operation. A specific timetable for dumping and restoration shall be included with each annual permit request.

e. Restoration Plan. A restoration plan indicating how the area will be re-used in a manner compatible with the Township Master Plan. The restoration plan shall include the proposed use of the restored area and the proposed topography drawn at two (2) foot contour intervals.

f. Operating Specifications. A detailed description of the operating procedures, so as to demonstrate conformance with the standards of sub-section D., below.

D. Standards. All landfill and dumping activity shall be subject to the following standards:

1. Limits of approval. All landfill and dumping activities shall be carried on within the boundary limits approved for such activities.

2. Setbacks.

a. Landfilling, dumping, and stockpiling shall not be conducted closer than one hundred (100) feet to the approved outer boundary for the operation, and not closer than three hundred (300) feet to any dwelling. The required setback area may be used only for access roads and greenbelt plantings and landscaping.

b. All equipment for sorting, processing, storing, weighing, and other operations shall be located at least three hundred

(300) feet from any public street right-of-way line or adjacent property line.

3. Noise, Dust, Debris. All processing equipment and activities and all storage areas shall be treated, covered, muffled, or otherwise controlled to prevent excessive noise dust, debris, or other impacts beyond the property line. Any trucks hauling material to or from the site shall be enclosed or covered to prevent materials from blowing or falling out of the trucks.

4. Road Treatment. All private access roads shall be treated to create a dust-free surface. The operator shall work with the Township to minimize dust on public access roads serving the site.

5. Frontage and Access. The subject site shall have a minimum frontage of 250 feet on a major or secondary thoroughfare having an existing or proposed right-of-way of at least 86 feet. However, a proposed dumping operation may be approved without frontage on a thoroughfare if it is located adjacent to an approved dumping operation which has sufficient frontage, provided that the proposed operation is granted access across the existing operation.

6. Fencing. Landfill and dumping operations shall comply with the following fencing requirements:

   a. Where slopes steeper than thirty (30) degrees exist for a period of one (1) month or more, the proposed operation shall be enclosed with a six (6) foot high cyclone fence or similarly effective barrier located at least fifty (50) feet outside the edge of the excavation area.

   b. Where collection of water greater than one (1) foot in depth occurs for a period of one (1) month or more in an area occupying two hundred (200) square feet or more, fencing shall be required as previously noted.

7. Slopes. Finished slopes shall not exceed four to one grade (4 feet horizontal per 1 foot vertical). There requirements shall be complied with as each phase of the excavation or dumping proceeds. The finished slopes shall be achieved within twelve (12) months after work has begun on any section.

8. Topsoil and Seeding. Sufficient topsoil shall be stockpiled so that a minimum of three (3) inches of topsoil will be placed on the top of the finished operation. The topsoil shall be planted immediately with grass or other groundcover, subject to approval of the Township.

9. Berms. Minimum ten (10) foot high berm with side slopes of no greater than four on one grade shall be required around any active cell which is adjacent to a public thoroughfare or exterior property line. This requirement may be waived when topographic or other screening exists that would accomplish the purpose of the berm.

E. Violations. To insure compliance with these regulations, the Zoning Official, or their designee, shall conduct periodic inspections. In the event that a violation is found, the Zoning Official shall send written notice to the permit holder. Failure to correct the violation within thirty (30) days shall automatically void the permit. No new permits shall be issued until the violation has been corrected.

5.24 Large-Format Retail Establishments.

A. Intent. It is the intent of this section to regulate large-format retail establishments, whether located as an individual use on a single site or as part of a shopping center with a grouping of attached and/or detached buildings. While it is recognized that large-format retail establishments may provide goods and services to Township residents, such stores are primarily focused on attracting consumers from a market area larger than the Township. Therefore, specific standards are required to ensure that large-format retail stores can be adequately served by and do not create an inordinate impact upon roads, utilities, storm drainage and police and fire services.

It is further intended by this section that large-format retail establishments be designed in a manner that is compatible with the primarily residential character of the Township.

B. Location. Large-format establishments shall be located C-2 District on sites having direct frontage on a State highway or trunkline or abutting property which will provide a site with direct access to such roads.

C. Minimum Area and Width. large-format retail stores developed individually or in combination shall have a minimum area of ten (10) acres. Sites of less than ten (10) acres may be approved, in the sole discretion of the Planning Commission, when it is demonstrated by the applicant that the following conditions are met:

1. All design standards set fourth in sub-section D are met.

2. Sufficient area is available to meet all landscaping and buffering standards set forth in Section 7.3(A).

D. Design Standards. The applicant shall demonstrate in the submission of a site plan and supportive material that the following design standards are met:

1. Aesthetic Character.

a. Facades and Exterior Walls:

i. Facades greater than one hundred (100) feet in length, measured horizontally, shall incorporate projections or recesses extending at least twenty (20) percent of the length of the facade. No uninterrupted length of any facade shall exceed one hundred (100) horizontal feet.

ii. Ground floor facades that face public streets shall have arcades, display windows, entry areas, awnings or other such features along no less than fifty (50) percent of their horizontal length.

iii. Building facades must include a repeating pattern that includes no less than two (2) of the following elements:

- color change;
- texture change; and
- an expression of architectural or structural bays through a change in plane no less than twelve (12) inches in width, such as an offset, reveal or projecting rib.

b. Roofs. Roofs shall exhibit one (1) or more of the following features depending upon the nature of the roof and building design:

i. Flat Roofs: parapets concealing flat roofs and rooftop equipment such as HVAC units from public view are required. Parapets shall not exceed one-third (1/3) of the height of the supporting wall at any point.

ii. Pitched Roof:

- overhanging eaves, extending no less than three (3) feet past the supporting walls;
- an average slope greater than or equal to one (1) foot of vertical rise for every three (3) feet of horizontal run and less than or equal to one (1) foot of vertical rise for every one (1) foot of horizontal run; and

- three (3) or more roof slope planes.

c. Materials and colors.

i. Predominant exterior building materials shall be high quality materials, including, but not limited to, brick, stone, and integrally tinted/textured concrete masonry units.

ii. Facade colors shall be low reflectance, subtle, neutral or earth tone colors. The use of high-intensity colors, metallic colors, black or fluorescent colors shall be prohibited.

iii. Building trim and accent areas may feature brighter colors, including primary colors, but neon tubing shall not be an acceptable feature for building trim or accent areas.

iv. Exterior building materials shall provide texture to at least fifty (50) percent of the facade and shall not be completely made up of smooth-faced concrete block, tilt-up concrete panels or prefabricated steel panels.

d. Entryways. Each principal building on a site shall have clearly defined, highly visible customer entrances featuring no less than three (3) of the following:

i. canopies or porticos;

ii. overhangs;

iii. recesses/projection

iv. arcades;

v. raised corniced parapets over the door;

vi. peaked roof forms;

vii. arches;

viii. outdoor patios;

ix. display windows;

x. architectural details such as tile work and moldings which are integrated into the building structure and design;

xi. integral planters or wing walls that incorporate landscaped areas and/or places for sitting; and

xii. Pavement/material changes at drive crossings to better define pedestrian cross walks.

2. Site Design.

a. Parking lot location. No more than fifty (50) percent of the off-street parking area devoted to the large-format retail establishment shall be located between the front facade of the principal building and the abutting streets.

b. Connectivity. The site design must provide direct connections and safe street crossings to adjacent land uses. Pavement/material changes at drive crossings shall be installed to better define pedestrian cross walks.

c. Pedestrian Circulation.

i. Sidewalks at least eight (8) feet in width shall be provided along all sides of the lot that abut a public street.

ii. Internal pedestrian walkways, no less than six (6) feet in width, shall be provided connecting the public sidewalk to the principal customer entrance of all principal buildings on the site. At a minimum, walkways shall connect focal points of pedestrian activity such as, but not limited to, transit stops, street crossings, building and store entry points, and shall feature adjoining landscaped areas that include trees, shrubs, benches, flower beds, ground covers or other such materials for no less than fifty (50) percent of the length of the walkway.

iii. Sidewalks, no less than eight (8) feet in width, shall be provided along the full length of the building along any facade featuring a customer entrance, and along any facade abutting public parking areas. Such sidewalks shall be located at least ten (10) feet from the facade of the building to provide planting beds for foundation landscaping, except where features such as arcades or entryways are part of the facade.

iv. All internal pedestrian walkways which cross or are incorporated with vehicular driving surfaces shall be distinguished from such driving surfaces through the

use of durable, low maintenance surface materials such as pavers, bricks or scored concrete to enhance pedestrian safety and comfort, as well as the attractiveness of the walkways. Surface materials used for internal pedestrian walkway shall be designed to accommodate shopping carts.

d. Central Features and Community Space. Each large-format retail establishment subject to these standards shall contribute to the establishment or enhancement of community and public spaces by providing at least two (2) of the following: patio/seating area, pedestrian plaza with benches, transportation center, window shopping walkway, outdoor playground area, kiosk area, water feature, clock tower or other such deliberately shaped area and/or a focal feature or amenity that, in the judgment of the Township, adequately enhances such community and public spaces. Any such areas shall have direct access to the public sidewalk network and such features shall not be constructed of materials that are inferior to the principal materials of the building and landscape.

e. Delivery/Loading Operations. Loading docks, trash collection, outdoor storage and similar facilities and functions shall be incorporated into the overall design of the building and the landscaping so that the visual and acoustic impacts of these functions are fully contained and out of view from adjacent properties and public streets. Use of screening materials that are different from or inferior to the principal materials of the building and landscape is prohibited. No delivery, loading, trash removal or compaction, or other such operations shall be permitted between the hours of 10:00 p.m. and 7:00 a.m. unless the applicant submits evidence that sound barriers between all areas for such operations effectively reduce noise emissions to a level of forty-five (45) dB, as measured at the lot line of any adjoining property. Delivery/loading operations shall be setback a minimum of fifty (50) feet from adjacent residentially zoned property.

E. Traffic Impact. The applicant shall submit a detailed traffic study in a form that is acceptable to the Township, prepared by a recognized and independent traffic engineer, demonstrating the impact of the large-format retail establishment on the transportation network. Based on the results of the traffic impact study, the applicant shall propose methods of mitigating any adverse impacts to the transportation network and show to what degree the proposed methods maintain or improve the operating levels of the impacted streets and intersections.

5.25 Mining of Gravel, Sand and/or Other Minerals. All mining operations shall be required to comply with the following requirements, standards, and regulations, including making application for and obtaining an operating permit, if the operator will remove more than 1,000 cubic yards in any year.

A. Permit Application. An application for a mining special land use permit shall include the following detailed information and plan drawings:

1. Name of the owner, or owners, of land from which removal is to be made.

2. Name and address of applicant making a request for such permit.

3. Name and address of the person, firm, or corporation that will be conducting the actual removal operation.

4. Location, size, and description of the area from which the removal is to be made.

5. Location of the processing plant.

6. Type of materials or resources to be removed.

7. Proposed method of removal, general haul route, and whether blasting or other use of explosives will be required.

8. General description of equipment to be used.

9. The estimated number of years to complete operations.

10. A statement that a performance guarantee satisfactory to the Township, will be furnished. Upon submission of a topographical survey by a Registered Civil Engineer or registered Land Surveyor showing completion of the reclaimed areas, the performance guarantee shall be released, in accordance with the amount of security per acre.

11. As part of the application, the applicant shall submit a topographic survey of the existing parcel drawn to scale and prepared by a Registered Civil engineer or Registered Land Surveyor with minimum five (5) foot contour intervals based upon U.S.G.S. datum. The drawing shall also clearly show the area to be mined, areas for stockpiling, processing plant locations, maintenance areas, and similar use areas. The applicant shall also prepare a Plan of Reclamation which depicts the final elevations referenced to U.S.G.S. datum and prepared by a Registered Civil Engineer and or Registered Land Surveyor. The applicant will propose a certain plan of operation and will be expected to comply with such a plan during

the full term of the permit. The Plan of Reclamation shall be designed to accommodate one or more of the uses permitted in the underlying, principal zoning classification.

12. The application shall be accompanied by a processing fee, to be paid by the applicant, in an amount to be established from time to time by resolution of the Township Board.

B. Standards For Mining Operations.

1. All buildings and mining equipment shall be located no closer than one hundred fifty (150) feet to the nearest abutting property line.

2. No excavation or mining shall take place within fifty (50) feet of the nearest abutting property line, nor within seventy-five (75) feet of the right-of-way of an existing or a platted street. If the circumstances of the site indicate that either or both of these setback requirements would not be adequate to protect abutting property, the Planning Commission shall require a greater distance and may also require provision of a greenbelt and/or earthen berm within a portion of the setback area. A reduction in the setback from a street right-of-way may be granted by the Township Board only in those instances where it is necessary to reduce the final elevation so that it conforms to the elevation of the street.

3. All active excavation shall be screened from view of an adjoining residential district by one of the following:

   a. Construction of a raised earth berm, along the boundaries of the property. The Planning Commission shall determine the required berm height based on the need for screening along each property line (not to exceed twelve (12) feet in height). The berm shall be planted with grass, trees, and similar vegetation, and shall be sloped appropriately for the proposed vegetation.

   b. Plantings of coniferous trees having a minimum caliper of 3 inches along the boundaries of the property with sufficient staggered rows and of a depth, that will guarantee effective screening.

4. All equipment and facilities used in the production, processing or transportation of sand, gravel, or stone shall be constructed, maintained, and operated, in such manner as to comply with the Environmental Performance Standards of Section 10.1.

5. Any paved public road used as a haul route to and from the mining site shall be swept, as needed, to prevent any accumulation of

sand and/or gravel on the public roads. All gravel public or private roads providing access to the mining site shall be kept dust-free at all times during mining operations.

6. The applicant shall acquire approval as to haul routes, bonding requirements, weight limits, speed limits, and other matters within the jurisdiction of the agencies responsible for the public roads.

7. The haul route shall be chosen so as to cause the least amount of disturbance to uses outside the Gravel and Sand Districts. All operators shall clearly post and otherwise inform all drivers of the approved haul route for that specific mining operation.

8. Temporary stockpiling of topsoil or overburden near road intersections and similar operational problems shall be subject to approval of the Township Board as not constituting a hazard to road traffic, pedestrians, or adjoining property.

9. Upon termination of any excavation and/or mining operation either by the operator, owner, the Township through this Ordinance, and/or through judicial means, the land shall be reclaimed according to the Standards for Rehabilitation in Section 5.25(C).

10. Sand and gravel operations shall not leave or bury obsolete equipment on the mining site. Violations of this provision shall be grounds for revocation of the operator's permit.

11. In order to protect the water wells in the surrounding area, dewatering is prohibited unless approved by the Township Board and appropriate State / County agencies based upon review by the Township Engineer to ensure against unreasonable disturbance of water wells.

12. All trucks shall be prohibited from standing and parking on the public right of way outside the entrance to all mining operation sites.

13. In the preparation of this ordinance, it is recognized that it would be impossible to foresee all of the activities which could potentially result in hazards to the public health, safety and welfare. Therefore, the Township Board shall be authorized to direct that actions of the operator be taken or ceased in order to prevent an immediate and identified harm to the public health, safety and welfare in connection with the gravel mining operation. The operator shall comply with such directive, however, in the event such a directive is given, the operator shall:

a. Be given a written notice identifying the reason for the directive, and specifying the action which is to be taken or ceased.

b. Be entitled to a hearing before the Township Board upon request of the operator. Such hearing shall be conducted at the next regular Township Board meeting, or at a special meeting the Supervisor may call for this purpose.

C. Standards for Rehabilitation of Mined Areas

1. All excavations shall be made either to a water-producing depth of at least 8 feet below the low-water mark for at least 80 percent of the water area, or shall be graded or backfilled with earthen materials, to insure:

a. That the excavated area shall not collect and permit to remain therein, stagnant water; or

b. That the surface of such area which is not permanently submerged is graded or backfilled as necessary so as to reduce the peaks and depressions thereof, and so as to produce a gently rolling surface that will minimize erosion due to rainfall and which will be in substantial conformity to the adjoining land in the immediate area.

2. The banks of all sand and gravel excavations shall be sloped to the water line in a water-producing excavation, and to the pit floor in a dry operation, at a slope which shall not be less than three (3) feet horizontal to one (1) foot vertical, and said banks shall be restored with vegetation in a manner set forth hereunder.

3. Where a permanent body of water will result from the mining operations, the slopes on all sides of the pit beginning at the high water mark, shall not exceed 4 feet horizontal to 1 foot vertical until the water reaches a depth of 5 feet at the low water mark.

4. Vegetation shall be restored by the use of sufficient soil and overburden and by appropriate seeding of grasses or planting of shrubs or trees in all parts of the mining area where such area is not to be submerged under water, as provided above.

5. Upon cessation of mining operations by abandonment or otherwise, the operator, within a reasonable period of time not exceeding twelve (12) months thereafter, shall remove all plant structures, buildings, stockpiles, and equipment unless such building or structures can be lawfully used in the district in which they are located.

6. All mined out areas shall, within a reasonable length of time, be reclaimed and rehabilitated consistent with the applicant's approved Plan of Reclamation. General rules for determining the reasonable length of time shall be:

   a. The plan of reclamation shall include a schedule for reclamation of each particular area to be mined. This schedule may be adjusted or amended once each year, as part of the annual inspection process, upon demonstration of a reasonable basis by the operator.

   b. Reclamation shall begin within one (1) year of substantial completion of the mining activities, and

   c. Reclamation shall be complete within two (2) years.

7. In the event the Planning Commission confirms that an operator previously mined areas of land without a permit, reclamation plan or performance guarantee, such operator shall include in the operators reclamation schedule a plan for the reclamation of such areas in segments of not less than 100 acres per year. Said reclamation plan for such previously mined areas shall conform to all current permit and bonding requirements.

D. Performance Guarantee Requirement:

1. A permit shall not be issued upon any application involving the removal of more than 1000 cubic yards of soil unless the Permittee shall first post a performance guarantee with the Township Clerk pursuant to Section 16.8, except as otherwise provided herein. The performance guarantee shall be in a form approved by the Township Board and in the amount of the cost of the reclamation and rehabilitation work as set forth in the Plan for Reclamation as submitted by the applicant. The cost of that work shall be estimated by the Township Engineer and approved by the Township Board after recommendation of the Gravel Committee as established under Section 5.25(E)(1), below; provided further that the Township Board is authorized to waive or reduce all or any part of the amount of such performance guarantee to the extent that the Township Board determines the same unnecessary to insure the completion of the work set forth in said plan. The Township Engineer's estimate will be based upon a review of that work as provided in the Reclamation Plan and shall be in an amount sufficient to cover the cost of reclamation by another at that point in time when reclamation is scheduled to commence. If the Township Engineer determines that the amount of the current surety is insufficient to reclaim the site, the amount of the performance guarantee shall be in-

creased accordingly. The Township Engineer shall also consider inflation and other reclamation cost increases during the annual performance guarantee review (Section 5.25(D)(3)).

2. The performance guarantee shall be valid for a one-year period and shall contain the expiration date. The performance guarantee shall include a cancellation / expiration clause which shall provide that the surety company shall notify the Township in writing a minimum of 30 days prior to cancellation and/or expiration of the performance guarantee (Section 5.25(D)(5)). The Township Clerk shall be provided one original bond certificate for the Township's records. The performance guarantee shall include the parcel identification number and legal description of the area covered by the performance guarantee.

3. The conditions of said performance guarantee shall be that it cover the entire area already disturbed and the entire area that will be disturbed by the operator within the current calendar year (January 1 - December 31). The performance guarantee shall reference all parcels covered by the performance guarantee by parcel identification number. The minimum area covered by the performance guarantee shall be 20 acres. The performance guarantee shall be kept in full force and effect until the area covered by the performance guarantee has been reclaimed according to the operator's approved rehabilitation plan. The Permittee shall comply with all provisions of this ordinance and terms and conditions of the permit, and complete all work set forth in the rehabilitation plan. The performance guarantee shall be reviewed annually by the Township Engineer to ensure that the performance guarantee amount is adequate, after adjustment for inflation and other reclamation cost increases, to cover completion of all work set forth in the rehabilitation plan.

4. For good cause shown, the Township Board is authorized to grant the Permittee an extension of the time to complete the work shown on the plan of Reclamation upon the Permittee's application therefor prior to the expiration of the date for completion.

5. Upon the Permittee complying with the provisions of this Ordinance, and the terms and conditions of the permit, the Clerk shall issue to the Permittee a Certificate of Completion and the performance guarantee shall be canceled, and in the case of a deposit of cash, certified check or irrevocable letter of credit, the same shall be returned to the Permittee.

E. Periodic Inspections & Reports

1. A permit shall continue for such length of time as may be required to complete removal of the sand and gravel as long as the operations are carried out in compliance with this Ordinance and the permit. In order to provide the Township with periodic review for compliance with all operations and permit requirements, the mining site shall be inspected at least annually by a committee made up of the Township Supervisor and two Planning Commission members appointed annually by the Chairperson of the Planning Commission. Any committee member may direct the Township Engineer and/or Township Planner to be present and assist with the site inspection and review. Prior to inspection, the Township shall notify the operator of the date and time of the inspection so that he will have the opportunity to be available.

   The operator of each mining site under permit from the Township shall prepare and provide to the inspection committee an aerial photograph or a contour map of the site that includes the following:

   a. A scale of 1" = 200' with contour intervals of five (5) feet.

   b. Areas to be excavated in future years shall be clearly defined.

   c. The aerial photo or contour map shall be prepared by a registered civil engineer or land surveyor and shall show the conditions of the site during the month of November of the current year.

   At the time of the annual inspection, the operator shall be prepared to provide ground control stakes for the aerial survey or surveyor's stakes for the contour map, if the committee requests correlation with physical features on the site.

   The committee shall prepare a report and if the mining operation is in violation of this Ordinance, the Township Board may have its consulting engineer inspect the site and prepare a written report. Upon finding the operator in violation of the Ordinance or permit, the Township Board shall notify him in writing. The violation shall be remedied within ninety (90) days or the Township Board may revoke the operating permit.

2. In order to defray the expenses incurred by the Township for surveillance of the mining operation and engineering inspections to insure compliance with the approved mining plan and rehabilitation plan, the operator shall establish an annual escrow account for surveillance and inspection of the mining operation. The escrow amount shall be determined on a per acre basis and shall be set by

resolution of the Township Board. In determining the per acre amount, the Board may consult with a Registered Civil Engineer or Registered Landscape Architect with expertise in reclamation of mining sites and the costs associated with compliance inspections. Any amount remaining in the escrow account at the termination of the operations shall be returned to the operator.

F. Procedures For Approval

1. Approval of mining operations shall be by way of special land use permit, pursuant to Article 4 and the standards of this Section. Sufficient copies of the complete application, including plan drawings, shall be submitted to the Building Department Township Clerk (18 copies). The Building Department will distribute copies to the township officials and staff. The Township Engineer, Planner and Attorney will review the complete application and provide their recommendations to the Planning Commission. The Planning Commission will then review the site plans for the proposed mining operation and the rehabilitation plans for the mined areas and approve or deny the permit, according to the requirements and standards of Section 4.5 and Sections 5.25(A), (B), and (C). The

5.26 Motel or Hotel. Motels and hotels are subject to the following conditions:

A. A site shall contain no less than two (2) acres of land and no less than one thousand (1,000) square feet of lot area shall be available per guest unit.

B. Each unit shall contain not less than two hundred and fifty (250) square feet of heated/air-conditioned floor area per guest unit.

C. All buildings shall be setback no less than fifty (50) feet from all perimeter parcel lines, while one hundred (100) feet is required when adjacent to residentially zoned, planned or occupied land.

D. Accessory uses may include, but not be limited to meeting rooms, ballrooms, restaurants, bars, recreational uses, and gift shops.

E. Cooking and/or kitchen facilities may be provided in new hotels/motels upon demonstration by the applicant that the provisions of all applicable fire prevention and building codes have been complied with.

5.27 Ponds. Private residential ponds, and agricultural or farm ponds are subject to the following conditions:

A. Parcel size must be a minimum of five (5) acres.

B. There shall be a setback of at least one hundred (100) feet from the edge of the excavation to all property lines.

C. There shall be a minimum setback from any septic tank and/or tile disposal field of at least one hundred (100) feet.

D. Where a pond will be used for swimming, there shall be no slope in excess of 5:1 (five feet horizontal to one foot vertical) until the water reaches a depth of five (5) feet, on any side of the pond where a beach exists. In no case shall any slope exceed 3:1.

E. Excavated materials, in excess of one thousand (1,000) cubic yards, may not be hauled off the site unless specific approval is granted by the Planning Commission. Construction of a pond shall not be used as a means of establishing a mining operation in other than a Gravel and Sand district by the operator and/or the Planning Commission.

5.28 Private Schools. Private primary and secondary schools (pre-kindergarten through grade 12) are subject to the following conditions:

A. The Planning Commission shall evaluate the adequacy of the proposed site size based upon the following guidelines:

School Type	Student Capacity	Site Size In Acres
Elementary	300-600	5 + 1/100 students
Junior High	750 - 1,000	15 + 1/100 students
Senior High	900 - 2,000	25 + 1/100 students

B. Adequate off-street parking shall be provided for all teachers, employees, and visitors.

C. Off-street waiting space shall be available so that school buses and parents' automobiles are not forced to stand within the right-of-way of any public street.

D. The layout of all parking lots, driveways, waiting areas and loading zones shall be designed with pedestrian safety as the primary consideration.

E. All buildings shall be set back at least fifty (50) feet from all lot lines abutting a residential use.

5.29 Rooming House or Boarding House. A rooming house, boarding house, or other similar use which provides lodging and meals for residents are subject to the following conditions:

A. Off-street parking shall be provided based on the same standards as are used for multiple family dwellings.

B. Food service shall be limited to residents of the rooming house only and not available to the general public.

C. The site shall include at least three thousand (3,000) square feet of land area per rooming unit.

5.30 Senior Housing Apartments. Senior housing apartments are subject to the following standards:

A. All of such facilities shall be constructed, maintained and operated in conformance with applicable state and federal laws.

B. The site shall be within walking distance and have suitable pedestrian connection to shopping facilities for food, prescription drugs, and personal services such as laundries, dry cleaners, beauty and barber shops, and similar uses.

C. Off-street parking shall be provided in the ratio of one space per unit.

D. The density of development permitted shall be based on the following requirements of land area per unit, according to the number of building stories. (Because of the present ability of the Fire Department to safely handle a maximum of three (3) stories when fighting a fire, no senior citizen housing will be permitted to exceed three (3) stories or thirty (30) feet in height.)

Stories	Required Land Area Per Unit (square feet)	Maximum Density (dwelling units per acre)
3	1,200	36
2 or less	1,550	28

5.31 Shooting Ranges, Gun Clubs. Shooting ranges, gun clubs, and similar uses, such as survival and other air-gun games, are subject to the following conditions:

A. The minimum site size shall be eighty (80) acres with a minimum width of one thousand three hundred twenty (1,320) feet. If the proposed description of the project indicates the potential for adverse impacts on adjacent properties, the Planning Commission and Township Board may require an increase in the minimum sizes and setbacks established for the proposed use in the zoning ordinance. Any increase in such minimum sizes shall be required as the result of the Planning Commission and Township Board requiring additional information to determine, and attempt to limit, the potential negative impact upon adjacent properties caused by noise, traffic, lights and other nuisance factors.

B. Minimum front, side and rear yard setbacks shall be two hundred fifty (250) feet. Minimum setbacks may be increased by the Planning Commission if warranted by the proposed facility in accordance with the *NRA Range Sourcebook*, published by the National Rifle Association.

C. Off-street parking shall be provided in the ratio of one (1) space for each three (3) users at capacity. All parking areas shall be kept dust-free at all times so as not to become a nuisance to adjoining properties.

D. All parking areas shall be screened from view of an adjoining residential district or use by either a greenbelt, obscuring fence, or a masonry wall, whichever is determined by the Planning Commission to be the most appropriate and effective.

E. The hours when shooting is permitted at a gun club or shooting range shall be limited from 9 a.m. to 9 p.m. Monday through Saturday and 12 noon to 6 p.m. Sundays. The Planning Commission may apply more restrictive hours where protection for adjoining residents is necessary.

F. The design of the facility shall clearly show that safety of persons on and off the site is guaranteed. This shall mean that no projectile of any kind may be permitted to leave the site. Unless this safety requirement is clearly indicated by the design plans, a permit shall not be issued. The design of all ranges shall incorporate the recommended safety features of the National Rifle Association or similar safety features.

G. The firing range shall be fenced on all sides except the firing line, by a fence no less than eight (8) feet in height. Such fence shall be either of a chain-link type or of board construction sufficient to prevent persons from passing over or through the fence.

H. The firing line or other area from which firearms are discharged shall be located no closer than one hundred fifty (150) feet from any property line, nor closer than five hundred (500) feet from any existing residential structure other than those on the premises.

I. The intensity level of sounds shall not exceed seventy-five (75) decibels (dBA) at the lot line of industrial uses, sixty-five (65) decibels at the lot line of commercial uses, and fifty-five (55) decibels at the common lot line when adjacent to residential uses and residential districts. The sound levels shall be measured in accordance with Section 10.1(J)

J. Central loudspeakers/paging systems are prohibited within two hundred fifty (250) feet of residentially planned, zoned or used property. Such systems shall not be directed toward a residential area even if outside the two hundred fifty (250) foot setback.

K. Survival games or other air-gun games may be permitted only in areas of the Township that have been designated as approved hunting areas and all properties used for such games shall be completely fenced to prevent participants from trespassing on adjoining properties. Signs warning participants not to cross the fence shall be placed every two hundred (200) feet along its perimeter. Failure to follow this requirement shall be grounds for immediate revocation of the applicant's Special Land Use Permit.

5.32 Wireless Communication Facilities.

A. Purpose and Intent.

It is the general purpose and intent of the Township to carry out the will of the United States Congress by authorizing communication facilities needed to operate wireless communication systems. However, it is the further purpose and intent of the Township to provide for such authorization in a manner which will protect the health, safety and welfare and retain the integrity of neighborhoods and the character, property values and aesthetic quality of the community at large. In fashioning and administering the provisions of this section, attempt has been made to balance these potentially competing interests.

Recognizing the number of providers authorized to establish and operate wireless communication services and coverage, and changes in State and Federal legislation, it is the further purpose and intent of this section to:

1. Facilitate adequate and efficient provision of sites for wireless communication facilities and ensure that wireless communication facilities are situated in appropriate locations and relationships to other land uses, structures and buildings.

2. Establish predetermined districts in the location considered best for the establishment of wireless communication facilities, subject to applicable standards and conditions.

3. Recognize that operation of a wireless communication system may require the establishment of facilities in locations not within the predetermined districts. In such cases, it has been determined that it is likely that there will be greater adverse impact upon neighborhoods and areas within the community. Consequently, more stringent standards and conditions should apply to the review, approval, and use of such facilities.

4. Limit inappropriate physical and aesthetic overcrowding of land use activities and avoid adverse impact upon existing population, transportation systems, and other public services and facility needs.

5. Provide for adequate information about plans for wireless communication facilities in order to permit the community to effectively plan for the location of such facilities.

6. Minimize the adverse impacts of technological obsolescence of such facilities, including a requirement to remove unused and/or unnecessary facilities in a timely manner.

7. Minimize the negative visual impact of wireless communication facilties on neighborhoods, community land marks, historic sites and buildings, natural beauty areas and public rights-of-way. This comtemplates the establishment of as few structures as reasonably feasible, the use of structures which are designed for compatibility, and the use of existing structures.

8. Implement and provide for compliance with State and Federal legislation through new and amended application, review, and decision standards, requirements and procedures for wireless communication facilities requests.

B. Authorization.

1. *As a Permitted Use Subject to Site Plan Approval.* In all Zoning Districts, a wireless communication facility described in this subsection (B)(1) shall be a permitted use subject to the standards and conditions in subsection (C), the application requirements in subsection (D), the collocation requirements in subsection (E), the procedures in subsection (G), and any prior Special Land Use or site plan approval conditions.

   a. Wireless communications equipment attached to an existing structure not previously approved and used as a wireless communications support structure and located within a non-residential zoning district, where there will be no substantial change in physical dimensions of the existing structure.

   b. A proposed collocation upon a wireless communication support structure which has been approved by the Township for such collocation but which is not permitted by administrative review under subsection (B)(3).

   c. Wireless communication equipment on an existing utility pole structure located within a right-of-way and not previously approved and used as a wireless communications support structure, where there will be no substantial change in physical dimensions of the existing pole.

d. Attached wireless communication facilities that are not permitted by administrative review under subsection (B)(3).

2. *As a Special Land Use.* Unless permitted under subsections (B)(1) or (B)(3), wireless communication facilities require approval as a special land use, which shall be subject to the standards and conditions in subsection (C), the application requirements in subsection (D), the collocation requirements in subsection (E), the procedures in subsection (G), and a demonstration of the need for the proposed facility based on one or more of the following factors:

i. Proximity to an interstate or major thoroughfare.

ii. Areas of population concentration.

iii. Concentration of commercial, industrial, and/or other business centers.

iv. Areas where signal interference has occurred due to tall buildings, masses of trees, or other obstructions.

v. Topography of the proposed facility location in relation to other facilities with which the proposed facility is to operate.

vi. Other specifically identified reason creating facility need.

a. If it is demonstrated by an applicant that a wireless communication facility necessary to providing services cannot be established as permitted under subsection (B)(1), wireless communication facilities may be permitted as a Special Land Use in the AG, SF-3, SF-2, SF-1, C-2, I-1 and I-2 Zoning Districts.

b. If it is demonstrated by an applicant that a wireless communication facility necessary to providing services cannot be established as permitted under subsection (B)(1) or in a zoning district identified in subsection (B)(2)(a), such wireless communication facility may be considered and permitted elsewhere in the Township as a Special Land Use, subject to the following:

1. In the application, the applicant shall demonstrate that no existing structure identified in subsection (B)(1) or location in a Zoning District identified in subsection

(B)(2)(a), above can reasonably meet the specifically disclosed service, coverage and/or capacity needs of the applicant. Such demonstration requires identification of all structures and properties considered and a factual explanation of why they are not feasible in terms of availability, suitability, or otherwise.

2. Wireless communication facilities shall be of a "stealth" design such as, without limitation, a steeple, bell tower, tree, or other form which is located and compatible with the existing character of the proposed site, neighborhood and general area, as approved by the Township taking into account any alternative designs submitted by the Applicant or identified during the review and decision process.

3. Locations outside the Zoning Districts identified in subsection (B)(2)(a), shall be limited to the following sites:

   i. Municipally-owned sites.

   ii. Other governmentally owned sites.

   iii. Religious or other institutional sites.

   iv. Public or private school sites.

   v. Other sites if: (i) not located in an R-1, R-2, R-3, or R-1A zoning district, and (ii) no sites identified in i – iv, above are available and suitable, as demonstrated in the application and determined by the Planning Commission.

4. The applicant's demonstration of good faith efforts to identify and evaluate alternate sites, locations, designs, placements, or features for the proposed facility that would or could be more consistent with the ordinance purposes stated in subsection (A).

5. For each alternate site, location, design, placement, or feature for the proposed facility identified by the applicant or otherwise, the applicant's demonstration that the proposed facility is more consistent with the ordinance purposes stated in subsection (A), and/or that such alternate is not feasible.

3. *Wireless Communication Equipment as a Permitted Use Subject to Administrative Review.* A proposal for attached wireless communication facilities that satisfies the following criteria does not require Special Land Use or site plan approval. Confirmation that these criteria are satisfied shall be determined by an administrative review and written certification by the Zoning Administrator to the Building Official prior to issuance of any building permits. Such proposals shall also be reviewed for compliance with the standards and conditions in subsection (C), with the certification to identify any items of noncompliance.

   a. The existing wireless communications support structure and/or wireless communications equipment compound are in compliance with this ordinance, and if not, are in compliance with a prior approval under this ordinance.

   b. The proposal complies with the terms and conditions of any prior final approval under this ordinance of the wireless communications support structure and/or wireless communications compound.

   c. The proposal will not increase the height of the wireless communications support structure by more than twenty (20) feet or ten percent (10%) of its original height (as first erected without any later additions), whichever is greater.

   d. The proposal will not increase the width of the wireless communications support structure by more than necessary to the stated and documented purpose of the increase.

   e. The proposal will not increase the area of the existing wireless communications equipment compound to more than 2,500 square feet.

C. Standards and Conditions Applicable to All Wireless Communication Facilities. All applications for wireless communication facilities shall be reviewed in accordance with the following standards and conditions, and, if approved, shall be constructed and maintained in accordance with such standards and conditions.

   1. Facilities shall not be demonstrably injurious or otherwise detrimental to the public safety and welfare.

   2. Facilities shall be located and designed to be compatible with the existing character of the proposed site and harmonious with surrounding areas.

3. Wireless communication facilities shall comply with applicable federal and state standards relative to the environmental effects of radio frequency emissions.

4. Applicants shall demonstrate an engineering justification for the proposed height of the support structure and an evaluation of alternative designs which might result in lower height. Support structures shall not exceed the minimum height necessary for collocation by at least two (2) providers, or by a larger number of providers identified and disclosed in the application as intending and contracted or otherwise committed to use of the structure.

5. The following additional standards shall be met:

   a. Except as needed for essential services, and regardless of the number of collocators, the maximum height of the wireless communication facility and antenna shall be the minimum height demonstrated to be necessary for reasonable communication by the applicant (and by other entities to collocate on the structure), not to exceed 250 feet. Accessory buildings shall be limited to the maximum height for accessory structure within the respective district.

   b. The minimum setback of the support structure from any property line and existing or proposed road right-of-way line shall be at least the height of the highest point of the support structure, including antennae. No wireless transmission tower shall be located closer than 2,000 feet to any other such tower.

   c. There shall be access to the support structure and equipment compound for police, fire and emergency vehicles, and for operation, maintenance, repair and inspection purposes, which may be provided by an easement.

   d. The division of property for the purpose of locating a wireless communication facility is prohibited unless all zoning requirements and conditions are met.

   e. Rooftop wireless communication facilities shall be architecturally compatible with the principal building. Wireless communication facilities mounted upon the side of a building shall be attached flush against the building surface, and shall not be allowed to protrude more than the depth of the antenna. Such facilities shall blend into the design, contour and color scheme of the building.

f. The Planning Commission may regulate the color of the wireless communication facility and all accessory buildings to minimize distraction, maximize aesthetic appearance, and ensure compatibility with surroundings. Lighting is only allowed if required by, and in compliance with the standards of, the Federal Aviation Administration, Federal Communications Commission, Michigan Aeronautics Commission, other governmental agencies, or the Township as a Special Land Use approval condition. Any such requirements and standards shall be documented by the Applicant.

g. Support structures shall be constructed and maintained in accordance with all applicable building codes. Any approval or certification under this ordinance shall be subject to and conditioned on the Building Official's authority to require and be provided with a soils report from a geotechnical engineer, licensed in the State of Michigan, based on actual soil borings and certifying the suitability of soil conditions, and a written engineering certification from the manufacturer or designer of the support system that the support system can safely accommodate attached antennas under expected weather conditions. Federal Aviation Administration, Federal Communication Commission, and Michigan Aeronautics Commission requirements shall be noted.

h. A maintenance plan, and any applicable maintenance agreement, shall be presented and approved as part of the site plan for the proposed facility. Such plan shall be designed to ensure the long term, continuous maintenance to a reasonably prudent standard. Such plans shall include the names, pager number and email addresses, if any, business and home telephone numbers, mobile telephone numbers, if any, and identity of no fewer than two persons who can be contacted at any hour of the day or night that have full authority to act on behalf of the applicant in the event of a malfunction or emergency. Such list of persons shall be kept current by immediate written notice to the Township of any changes.

i. The application shall include a certification by a State of Michigan licensed Professional Engineer regarding the manner in which the proposed structure will fall.

j. The application shall include a description of performance guarantee to be posted at the time of receiving a building permit to ensure removal of the facility when it has been abandoned or is no longer needed. The security shall be in

the form of cash, letter of credit, or an agreement in a form approved by the Township attorney and recordable at the Register of Deeds, establishing a promise of the applicant and owner of the property to remove the facility in a timely manner as required under this section of the ordinance. The applicant and owner shall be responsible for the payment of any costs and attorneys fees incurred by the Township in securing removal.

k. The application shall include a map showing existing and known proposed wireless communication facilities within the Township and areas within three (3) miles surrounding the Township. If the information is on file with the Township, the applicant shall update as needed. Any such information which is trade secret and/or other confidential commercial information may be submitted with a request for confidentiality in connection with the development of governmental policy. This ordinance shall serve as the promise to maintain confidentially to the extent permitted by law. The request for confidentiality must be in writing.

D. Application Requirements. All of the following information and documents shall be required for a Special Land Use, site plan, or administrative review application to be considered complete:

1. A site plan prepared in accordance with Article 12 shall be submitted, showing the location, size, screening, lighting and design of all buildings and structures.

2. The site plan shall also include a detailed landscape plan prepared in accordance with Article 7. The purpose of landscaping is to provide screening and aesthetic enhancement for the structure base, accessory buildings and enclosure. In all cases, fencing of a minimum of eight (8) feet in height shall be required for protection of the support structure and security from persons who may otherwise access facilities.

3. The application shall include a description of security to be posted at the time of receiving a building permit to ensure removal of the facility when it has been abandoned or is no longer needed, as provided in Subsection (F). In this regard, the security shall be posted and maintained in the form of: (1) cash; (2) irrevocable letter of credit; or, (3) other security arrangement accepted by the Township Board.

4. A map or plan showing the locations and heights of existing wireless communications support structures in the Township and com-

munities adjoining the Township, and which identifies structures the Applicant is using or has the right to use and the heights at which its antennas are or may be installed.

5. The name, address identity, home and business telephone numbers, pager number and email addresses, if any, and mobile phone number, if any, of the person to contact for engineering, maintenance and other notice purposes. This information shall be kept current by immediate written notice of the Township of any changes.

6. An application fee in an amount established by Resolution of the Township Board.

7. Identification of the dates, nature and conditions of any prior zoning approvals or permits for the property.

8. If the application is for a new wireless communication support structure or to place or install additional wireless communications equipment on an existing support structure, a structural analysis and certification to the Township by a registered professional engineer that the structure is designed to support, or capable of supporting the proposed wireless communications equipment. Any modifications necessary to a structure being capable of supporting the proposed equipment shall be specifically identified in the analysis and certification.

9. If modifications to a wireless communications support structure are identified in a structural analysis, a written determination by the Township Building Official that, subject to review of an actual building permit application and plans, the identified modifications would be allowed and that with the modifications, the structure would meet building code requirements.

10. If the application is for a new wireless communications support structure or to increase the height of an existing structure, a written analysis and justification by a registered engineer that the proposed height is the minimum necessary for the provision of personal wireless services and one colocation.

11. If the application is for a new wireless communications support structure, identification of all other structures and properties considered for the proposed use and a factual explanation of why they are not feasible in terms of availability, suitability, or otherwise.

12. If the application is for a new wireless communications support structure, identification of possible alternative locations, designs, or features, whether those alternatives were considered, and if so, a factual explanation of why those alternatives are not proposed.

13. If the application is for a new wireless communications support structure outside the AG, SF-3, SF-2, SF-1, C-2, I-1 and I-2 Zoning Districts, identification and submission in written form of the evidence and arguments the Applicant will rely on in claiming that those restrictions prohibit or have the effect of prohibiting it from providing personal wireless services and that its proposal is more consistent with the ordinance purposes stated in subsection (A), than alternate sites, locations, designs, placements and features.

14. Disclosure and copies of all other required governmental permits or approvals and the status and copies of pending applications for those permits or approvals.

15. If the application is for a Special Land Use approval, the name, expertise, and relationship to applicant of each licensed or registered professional that has or will provide evidence to support the application, with a summary of that evidence that includes any opinions expressed and the bases for such opinions.

16. For each professional opinion disclosed by the applicant as supporting the application, a statement of whether the applicant agrees that it should be subject to separate review by or for the Township, and if so, the type, scope, time, and cost of such a separate review that applicant believes would be reasonable.

17. The Applicant's email address, fax number or address to which the Township should direct notices regarding the Application.

E. Collocation.

1. Statement of Policy. It is the policy of the Township to minimize the overall number of newly established locations for wireless communication facilities and Wireless Communication Support Structures within the community, and encourage the use of existing structures for Attached Wireless Communication Facility purposes, consistent with the statement of purpose and intent, set forth in Subsection (A), Purpose and Intent, above. Each licensed provider of a wireless communication facility must, by law, be permitted to locate sufficient facilities in order to achieve the objectives promulgated by the United States Congress. However, particularly in light of the dramatic increase in the number of wireless communication facilities reasonably anticipated to occur as a result of the change of

federal law and policy in and relating to the Federal Telecommunications Act of 1996, it is the policy of the Township that all users should collocate on Attached Wireless Communication Facilities and Wireless Communication Support Structures in the interest of achieving the purposes and intent of this section, as stated above, and as stated in Subsection (A), Purpose and Intent. If a provider fails or refuses to permit collocation on a facility owned or otherwise controlled by it, where collocation is feasible, the result will be that a new and unnecessary additional structure will be compelled, in direct violation of and in direct contradiction to the basic policy, intent and purpose of the Township. The provisions of this subsection are designed to carry out and encourage conformity with the policy of the Township.

2. Feasibility of collocation. Collocation shall be deemed to be "feasible" for purposes of this section where all of the following are met:

   a. The wireless communication provider entity under consideration for collocation will undertake to pay market rent or other market compensation for collocation.

   b. The site on which collocation is being considered, taking into consideration reasonable modification or replacement of a facility, is able to provide structural support.

   c. The collocation being considered is technologically reasonable, e.g., the collocation will not result in unreasonable interference, given appropriate physical and other adjustment in relation to the structure, antennas, and the like.

   d. The height of the structure necessary for collocation will not be increased beyond a point deemed to be permissible by the Township, taking into consideration the several standards contained in Subsections (b) and (c), above.

3. Requirements for Colocation.

   1. The construction and use of a new wireless communication facility shall not be granted unless and until the applicant demonstrates that colocation is not feasible.

   2. All new and modified wireless communications facilities shall be designed and constructed so as to accommodate colocation.

   3. The policy of the community is for collocation. Thus, if a party who owns or otherwise controls a facility shall fail or re-

fuse to alter a structure so as to accommodate a proposed and otherwise feasible collocation, such facility shall thereupon and thereafter be deemed to be a non-conforming structure and use, and shall not be altered, expanded or extended in any respect.

4. If a party who owns or otherwise controls a facility shall fail or refuse to permit a feasible collocation, and this requires the construction and/or use of a new facility, the party failing or refusing to permit a feasible collocation shall be deemed to be in direct violation and contradiction of the policy, intent and purpose of the Township, and, consequently such party shall take responsibility for the violation, and shall be prohibited from receiving approval for a new wireless communication support structure within the Township for a period of five (5) years from the date of the failure or refusal to permit the collocation. Such a party may seek and obtain a variance from the Zoning Board of Appeals if and to the limited extent the applicant demonstrates entitlement to variance relief which, in this context, shall mean a demonstration that enforcement of the five (5) year prohibition would unreasonably discriminate among providers of functionally equivalent wireless communication services, or that such enforcement would have the effect of prohibiting the provision of personal wireless communication services.

F. Removal.

1. A wireless communication facility must furnish reasonable evidence of ongoing operation at any time after construction.

2. A condition of every approval of a wireless communication facility shall be adequate provision for removal of all or part of the facility by users and owners when the facility has not been used for 180 days or more. For purposes of this section, the removal of antenna or other equipment from the facility, or the cessation of operations (transmission and/or reception of radio signals) shall be considered as the beginning of a period of nonuse.

3. The situations in which removal of a facility is required, as set forth in paragraph 1 above, may be applied and limited to portions of a facility.

3. Upon the occurrence of one or more of the events requiring removal, the property owner or persons who had used the facility shall immediately apply for any required demolition or removal permits, proceed with, and complete the demolition/removal.

4. If the required removal of a facility or a portion thereof has not been lawfully completed within sixty (60) days of the applicable deadline, and after at least thirty (30) days written notice, the Township may remove or secure the removal of the facility or required portions thereof, with its actual cost and reasonable administrative charge to be drawn, collected and/or enforced from or under the security posted at the time of application.

G. Procedures.

1. Review and administrative actions on Special Land Use and site plan approval applications.

a. The Zoning Administrator shall promptly review Special Land Use and site plan approval applications to determine if they are administratively complete by inclusion of all information required in subsection (D). If the application is not complete, no later than 14 business days after receiving it, the Zoning Administrator shall provide a written or electronic notice to the Applicant specifying the information necessary to complete the application. Such initial review for completeness by the Zoning Administrator shall be on behalf of the Planning Commission for Special Land Use and site plan approvals.

b. The Zoning Administrator shall review supplemental information submitted in response to an incomplete application notice and notify the Applicant of any remaining deficiencies.

c. An application shall be administratively complete upon the Zoning Administrator's determination or the expiration of 14 business days from receipt of the application without a notice to the Applicant of deficiencies.

d. Upon a Special Land Use or site plan approval application being administratively complete, the Zoning Administrator shall promptly schedule it for a Planning Commission meeting that will allow for a Planning Commission site plan decision or Special Land Use decision after the required public hearing within the time periods in subsection (2) below.

e. If the application has disclosed professional opinions supporting the application and the Zoning Administrator or Planning Commission has determined that independent professional review for the Township of any such opinion should be performed, the reasonable costs of such review may be assessed to the Applicant by a written notice from the Zoning

Administrator, as a professional review cost to be paid in accordance with the notice.

2. Decisions on Special Land Use and site plan approval applications.

   a. The Planning Commission shall approve or deny a Special Land Use application for a new wireless communications support structure not more than 90 days after it is administratively complete.

   b. For all Special Land Use and site plan applications other than new wireless communications support structures, the Planning Commission shall approve or deny the application not more than 60 days after it is administratively complete.

3. Post-approval costs, fees and administrative actions. Zoning Compliance permits to implement and grant the authority allowed by a Special Land Use or site plan approval for wireless communication facilities, certificates of use and occupancy for such facilities shall be issued subject to and conditioned on all of the following:

   a. Any conditions of the Special Land Use or site plan approval.

   b. Payment of any outstanding professional review costs as described in subsection (G)(1)(e).

   c. Payment of a permit fees in an amount established by or in accordance with a Resolution of the Township Board.

5.32 Yard Waste Composting Facilities. Yard waste composting facilities, those that manage the biological decomposition of organic matter under controlled, aerobic conditions, are subject to the following conditions:

B. Site Location and Design.

1. Because of the level of truck traffic associated with this use, direct access to a paved County Primary road is required.

2. All internal roads and operation areas shall be kept dust-free at all times.

3. The site shall be level and well-drained. A grading plan showing existing and future elevations and method of managing stormwater runoff shall be submitted with any application for site plan and/or special land use approval.

4. If the site abuts property planned, zoned or used for residential purposes, a buffer zone shall be maintained where no composting, storage, transfer or loading activities will take place equal to five hundred (500) feet from existing residential structures and one hundred (100) feet from adjoining residential property lines. All buffer areas shall be maintained as vegetative strips to facilitate the filtration of pollutants from stormwater runoff.

5. All site access roads or drives and all areas for employee parking shall be paved with asphalt or concrete. Internal haul roads may be unpaved.

6. The portion of the compost site visible from a public street shall be screened from pubic view by a combination berm/landscaped buffer or other method acceptable to the Planning Commission.

7. A minimum of four (4) paved, off-street parking spaces shall be provided on-site.

C. Operation.

1. Access to the site shall be controlled to prevent unauthorized dumping during non-business hours. The operator shall establish a procedure and mechanism for proper disposal of non-yard wastes at an approved sanitary landfill.

2. Only yard wastes shall be composted at such facilities, typically including leaves, grass clippings, brush, and tree or shrub trimmings. All yard wastes must be brought to the site loose or in biodegradable bags with a cornstarch or similar base designed to degrade rapidly under aerobic conditions. All bags brought to the site shall be broken up and turned into compost windrows within five (5) days of delivery to the site. In no instance shall yard wastes be accepted in non-degradable plastic bags.

3. The decomposition process shall be properly managed and maintained in an aerobic condition to prevent all unnecessary odors. Towards this end, the temperature of compost piles shall be monitored regularly, and all compost piles shall be turned when the internal temperature drops below one hundred (120) degrees Fahrenheit.

4. Ponded water shall not be permitted to collect on a yard waste composting site. A plan for collection, retention and drainage of storm water shall be provided for review and approval. Vegetation filtration of runoff prior to discharge off-site shall be accomplished by use of a fifty (50) foot wide (minimum) perimeter strip/swale of grass, or similar measure. Any direct discharge to a water body

may require a Michigan Department of Environmental Quality (MDEQ) NPDES wastewater discharge permit.

5. The operator shall provide sufficient equipment on-site to properly manage the composting process. As a minimum this shall include a front end loader or similar machinery for loading, unloading, turning, and aeration operations; a shredder for reducing new material to a smaller particle size for faster decomposition; a source of water or watering trucks; and a screen to improve the quality and marketability of the final product.

6. The volume of yard wastes handled by the facility shall not exceed seven thousand (7,000) cubic yards of incoming yard wastes per acre of active composting area on-site, exclusive of access roads, service areas, parking areas, required buffer zones, and similar areas.

7. The operator shall provide a name, address, and phone number of the person responsible for operation of the site and who is also responsible for correcting all operational problems that may result in complaints being made to the Township.

8. Treated yard wastes shall be actively rotated in an aerobic condition. Wastes shall not be allowed to accumulate for longer than three (3) years before being finished and removed from the site.

9. The operator shall provide plans showing all equipment maintenance and storage areas. Plans shall show the location of all fuel storage facilities and shall detail primary and secondary containment for all hazardous materials, including product-tight containers for primary containment.

10. The applicant shall provide a plan for the removal of unmarketable compost.

11. An annual inspection/permit fee for all yard waste composting facilities shall be established by resolution of the Township Board.

12. Copies of all Michigan Department of Environmental Quality applications/permits, if required, shall be provided to the Planning Commission as part of the application package.

13. The use must conform with the Environmental Performance Standards of this ordinance, contained in Article 10.

14. The operator shall provide the township with a performance guarantee in the form of cash**,** or irrevocable letter of credit**,** to guarantee operation of the yard waste composting facility in conformance

with the standards of this Ordinance. The amount of the guarantee shall be established, from time to time, by resolution of the Township Board.

ARTICLE 6
GENERAL PROVISIONS

6.1 Application. The provisions of this Article shall be applicable to all zoning districts unless otherwise specified in this chapter.

6.2 Accessory Buildings and Structures.

A. Use of Accessory Buildings and Structures. Attached and detached accessory buildings and structures in residential districts shall not be used as dwelling units or for the conduct of any business, profession, trade or occupation, except permitted home occupations pursuant to Section 6.10. , Such accessory buildings and structures shall not be used as storage that is offered for rent.

B. Timing of Construction. No accessory building or structure shall be constructed or established on a parcel unless there is a principal building, structure or use being constructed or already established on the same parcel of land, unless otherwise approved by the Zoning Board of Appeals. The Board of Appeals shall require that a cash performance guarantee be posted to insure completion of the main building, as a condition of approval for prior construction of an accessory building.

C. Attached Accessory Buildings and Structures. Accessory buildings or structures which are attached to the principal building shall be considered a part of the principal building for the purposes of determining conformance with area, setback, height, and lot coverage requirements.

D. Detached Accessory Buildings and Structures

1. Setbacks. Detached accessory buildings and structures shall comply with the following setback requirements:

a. Front Yard Setback. Accessory buildings and structures shall comply with the front yard setback requirements established under Section 3.7. Accessory buildings on corner lots shall maintain the specified front setback from both streets, as required for main buildings in the same zoning district.

b. Side Yard Setback. Accessory buildings and structures shall comply with the side yard setback requirements established under Sections Section 3.7.

c. Rear Yard Setback. Accessory buildings and structures in the R-1A, R-1, R-2 and R-3 zoning districts zoning districts shall be setback from the rear property line by a distance of

at least ten (10) feet or the height of the accessory building or structure, whichever is greater. Accessory buildings and structures in all other zones shall be located no closer than ½ of the rear yard setback requirement for the district in which they are located, as established under Section 3.7.

2. Distance Between Buildings. Detached accessory buildings shall be located at least ten (10) feet from any building on the site.

3. Height. Accessory buildings and structures in the R-1A, R-1, R-2 and R-3 zoning districts zoning districts shall not exceed fifteen (15) feet in height. Accessory buildings and structures in all other zones shall comply with the maximum building height requirement for the district in which they are located, as established under Section 3.7**.**

4. Lot Coverage. Accessory buildings and structures shall be included in computations to determine compliance with maximum lot coverage standards established under Section 3.7.

E. Location in Proximity to Easements or Rights-of-Way. Accessory buildings and structures shall not be located within a dedicated easement or right-of-way.

F. Area in Relation to Principal Building. The total floor area of all attached and detached accessory buildings in R-1A, R-1, R-2 and R-3 zoning districts shall not exceed the total floor area of the main dwelling on the same lot.

G. Appearance. No attached or detached residential accessory building shall have exposed or uncovered cement block walls, tarpaper, plywood sheathing, or similar materials. All exposed walls shall have a finished appearance by the application of face brick, wood, aluminum or composition siding, or similar materials approved by the Zoning Administrator.

H. Non-Residential Features. In order to maintain the residential character of attached and detached accessory buildings located in the R-1A, R-1, R-2 and R-3 zoning districts, overhead or similar doors greater than nine (9) feet in height, and similar non-residential equipment and features, shall not be permitted on the side of the accessory building facing the front lot line.

I. Swimming Pools. Private swimming pools shall be considered as accessory structures and are subject to the following:

1. Private swimming pools shall not be permitted in the front yard.

2. All design and construction standards contained in the Michigan Residential Code related to private swimming pools shall be adhered to.

6.3 Agricultural Exemption. Farm operations protected under the Right to Farm Act (P.A. 93 of 1981, as amended) shall be exempt from regulation under this Ordinance. Individuals wishing to exercise this exemption must first provide documentation to the Zoning Administrator that the activities in question are protected by the Right to Farm Act. All other land uses and improvement activities that are not part of the farm operation shall adhere to the provisions of this Ordinance.

6.4 Building Grades.

A. Any building requiring yard space shall be located at such an elevation that a sloping grade shall be maintained to cause the flow of surface water to run away from the walls of the building. There shall be a sloping grade beginning at the finished grade line at the front of the building to the front lot line. However, this shall not prevent the maintenance of natural existing grades or the grading of a yard space to provide sunken or terraced areas, provided proper means are constructed and maintained to prevent the run-off of surface water from flowing onto the adjacent properties.

B. When a new building is constructed on a vacant lot between two (2) existing buildings or adjacent to an existing building, the existing established grade shall be used in determining the grade around the new building. The yard around the new building shall be graded in such a manner as to meet existing grades and not to intensify run-off of surface water onto the adjacent properties.

C. Final grades shall be approved by the Building Official. The Building Inspector may require the developer to submit a written opinion of a registered civil engineer or land surveyor concerning grading for proper drainage around the building or structure in question.

6.5 Buildings to be Moved or Demolished.

A. No building permit shall be granted for the moving or demolishing of buildings or structures from without or within the limits of the Township to be placed on property within said limits unless the Building Official shall have made an inspection of the building to be moved and has found that it is structurally safe, will not adversely affect the character of existing buildings in the neighborhood of the new location and will fully comply with the Michigan Building Code and Michigan Residential Code and all other federal, state, county and Township laws, ordinances, and regulations. A performance guarantee as established by the Township Board of sufficient amount to ensure cost of completing building for occupancy within a peri-

od of not less than six (6) months from date of permit shall be furnished before permit is issued.

B. Any building moved within a district and placed upon a foundation or any building moved into a district from outside the district shall be considered a new building and be subject to all the limitations and requirements herein set forth relating to uses, construction, permits, and certificates.

C. No permit shall be granted for the relocation of a building without evidence of approval from applicable road and utility agencies.

D. All debris from any demolished building or structure shall be properly disposed of. The foundation materials removed and disposed of, and backfilled with clean earth materials devoid of all debris, large stones and organic materials. The site shall be graded to a smooth, even surface and seeded to grass.

6.6 Drive-In/Drive-Thru Businesses. Businesses that employ drive-in or drive-thru facilities to service customers, including, but not limited to, restaurants, banks, pharmacies, coffee shops, and dry cleaners, shall adhere to the following regulations:

A. Driveways serving drive-in/drive-thru establishments shall have access to a paved County Road.

B. Adequate waiting spaces shall be provided for vehicle stacking, in accordance with Section 8.7(H).

C. The nearest edge of any ingress or egress point shall be located at least fifty (50) feet from any street or road intersection (as measured from the nearest right-of-way line).

D. A six (6) foot high obscuring wall, fence or landscaping shall be provided along any property line adjacent to residentially zoned or used land, in accordance with Section 7.10.

E. Devices for the transmission of voices shall comply with the noise standards of Section 10.1(J)**.**

6.7 Dwellings in Non-Residential Districts. No dwelling shall be erected in a non-residential zoning district, with the exception of caretaker's quarters as permitted in this Ordinance.

6.8 Essential Services. Essential services shall be permitted as authorized and regulated by law and other ordinances of the Township. The construction of buildings associated with essential services shall be subject to the provisions of Article 12, Site Plan Review (this shall not be construed to include sanitary sewage pump stations and similar structures as determined by the Zoning Adminis-

trator. Otherwise, the construction, maintenance, and alteration of essential services shall be exempt from the provisions of this Ordinance. The Zoning Administrator shall have the discretion to require Planning Commission review and approval of certain essential services, where, by nature of their character or placement, the potential for unusually adverse impact to neighboring properties exists.

6.9 Garage Sales, Rummage Sales and Similar Activities. Garage sales, rummage sales, yard sales, moving sales, and similar activities shall be considered temporary accessory uses within any residential zoning district subject to the following conditions.

A. Any garage sale, rummage sale, or similar activity shall be allowed without a building and land use permit for a period not to exceed four (4) days within a six (6) month period. Such activities in operation for a period of time in excess of four (4) days shall require a building and land use permit from the Administrator.

B. All such sales shall be conducted in a manner so as not to create a traffic hazard or a nuisance to neighboring properties.

C. All such sales shall be conducted a minimum of twenty (20) feet from the front lot line of the premises of such sale.

D. Overnight outside storage of goods or merchandise offered at such a sale is prohibited.

6.10 Home Occupations. Home occupations which are clearly incidental to the principal residential use are permitted in any residential district. The following conditions for home occupations shall be met.

A. The occupation shall utilize no more than twenty-five (25) percent of the total floor area of any one story of the residential structure so used. Additionally, home occupations may utilize up to twenty-five (25) percent of the total floor area of any one accessory building located on the same property as the residential structure.

B. The home occupation shall not involve non-family on-site employees.

C. All home occupation activities shall be conducted indoors, except gardening.

D. No structural alterations or additions which will alter the residential character of the structure shall be permitted to accommodate a home occupation.

E. Only customary domestic or household equipment, or equipment judged by the Zoning Administrator not to be injurious or a nuisance to the surrounding neighborhood shall be permitted.

F. There shall be no external evidence of such occupations except a small announcement sign conforming to provisions for home occupation signage contained in Section 9.7(C).

G. No unrelated commodity shall be sold on the premises in connection with a home occupation.

H. No home occupation shall be permitted which is injurious to the general character of the residential district and which creates a congested or otherwise hazardous traffic or parking condition.

6.11 Impact Assessment.

A. For certain land uses that are considered to have a significant potential impact on traffic, the infrastructure and demands for public services, and/or significant impacts on surrounding properties due to scale, the applicant shall be required to provide an impact assessment during the initial submittal for either a rezoning or site plan approval. When one or more of the following conditions exists, the Planning Commission may require the submittal of an impact assessment pursuant to this Section:

1. The number of residential units exceeds 100;

2. The square footage of non-residential buildings exceeds 100,000;

3. Anticipated vehicle traffic will exceed a total of 1,000 trips per day;

4. Hazardous materials will be generated, stored or disposed of on-site.

B. The cost of the impact assessment and review by the Township shall be borne by the applicant. Costs incurred by the Township for the review of a submitted impact assessment shall be charged to the trust and agency account established for the associated rezoning or site plan petition pursuant to Section 16.7.

C. The applicant may request a meeting with the Zoning Official, consultants and key agency staff prior to developing the impact assessment.

D. The minimum contents of this impact assessment shall be:

1. The name(s) and address(es) of person(s) or firm(s) responsible for preparation of the impact assessment and a brief statement of their qualifications.

2. An area plan or aerial photograph illustrating the entire site and nearby properties.

3. A description of overall site conditions, including a narrative and illustration describing adjacent uses, zoning, public roadways, utilities, significant woodlands, trees over eight (8) inches caliper, soil types, one hundred (100) year floodplains, drainage-ways and general topography. The area described shall be within one-quarter (1/4) mile for sites up to one hundred (100) acres and one (1) mile radius for larger sites. Aerial photographs are recommended to assist in describing the general vicinity.

4. A conceptual site plan illustrating a very general layout of proposed uses upon which the preliminary impact analysis is based, and any proposed phasing.

5. A description of the types of proposed uses and other man-made facilities, including any project phasing, and an indication of how the proposed use or uses conform or conflict with existing and planned development patterns. A description shall be provided of any increases in light, noise or air pollution which could negatively impact adjacent properties, particularly increases associated with smoke or truck routing.

6. A description of any general impact expected to wildlife areas, lakes, streams, ponds and regulated wetlands. Conceptual mitigation or replacement measures under consideration shall be described. The study shall also describe general measures to control soil erosion and sedimentation during and after construction.

7. A description of the number of expected employees, visitors or residents and the anticipated impact on police and fire protection. In particular, a description of the relationship of the use to municipal fire stations and the need for any new facilities or equipment shall be required. Letters from the appropriate agencies should be provided.

8. A description of proposed water and sanitary sewer facilities, including any improvements or off-site extensions needed to serve the long-range development on the site, and general calculations for sewage flows and water demands in comparison with sewer line capacity.

9. A description of conceptual plans to control drainage and any significant changes from existing drainage patterns.

10. Identification of methods of on and off-site disposal of solid waste. The information shall describe the type of hazardous substances expected to be used, stored or disposed of on the site, the general location within the site, and the method of containment. Documen-

tation of compliance with Federal and State requirements shall be submitted, as appropriate.

E. Documentation by a qualified wetland specialist shall be required wherever the Township determines that there is a potential State or Federally regulated wetland which may be impacted by the proposed project.

F. A traffic impact study, in accordance with Section 6.22, shall be included in the impact assessment, unless determined to not be necessary by the Planning Commission.

G. At the discretion of the Planning Commission or Township Board, a fiscal impact study may be required to estimate the anticipated financial effect of a proposed development project on the Township and those other public agencies which are likely to provide services to the occupants of said development. The study shall address such elements as, but not limited to, the anticipated tax revenue to be generated by the proposed development, and the frequency and expense of services it is likely to require.

6.12 One Lot, One Building. In all single-family residential districts, only one (1) principal building shall be placed on a single lot of record except for a caretaker's residence approved under Article 5.

6.13 Open Air Businesses/Outdoors Sales and Display of Products. Open air business shall include, but not be limited to, the following uses: automobile, truck, trailer, motorcycle, recreation vehicle, snowmobile, jet ski, and watercraft sales or rental; agricultural equipment sales; nurseries, landscape suppliers, lumber yards, home and garden centers, and the sale of lawn furniture and accessories; and the sale of mobile homes, storage sheds, play houses and other prefabricated buildings. Such uses shall adhere to the following standards:

A. The storage or display areas shall not be permitted in the front yard setback and shall meet all other yard setback requirements applicable to any building in the District.

B. All outdoor sales and display areas shall be paved and include an approved stormwater drainage system.

C. All loading activities and parking areas shall be provided on the same premises off-street.

D. The site shall have a minimum frontage of no less than one hundred and fifty (150) feet and area of thirty-five thousand (35,000) square feet.

E. Ingress and egress to the outdoor sales area shall be at least sixty (60) feet from the intersection of any two (2) streets.

F. The storage of any soil, fertilizer, or similar loosely package materials shall be sufficiently contained to prevent any adverse effect upon adjacent properties.

G. No outside storage of discarded or salvaged materials shall be permitted on the premises.

H. All equipment or materials stored outdoors shall be enclosed by a fence or wall with a height at least equal to the tallest item stored.

I. All repair work, collision repair, bumping, painting or similar automobile body work must be maintained as an accessory use and conducted within a completely enclosed building and all outside vehicles waiting for repair shall be screened with no less than a six (6) foot high masonry wall.

J. There shall be no broadcast of continuous music or announcements over any loudspeaker or public address system.

K. There shall be no strings of flags, pennants or bare light bulbs permitted.

L. The site shall include a building of at least five hundred (500) feet of gross floor area for office use in conjunction with the approved use.

M. Outdoor storage of vehicle parts, parts salvage or supplies is prohibited.

6.14 Open Space Preservation. This development option is provided pursuant to Section 506 of the Michigan Zoning Enabling Act, P.A. 110 of 2006, as amended. Under this option, land zoned R-3, SF-1, SF-2 and SF-3 may be developed with the same number of dwelling units as would conventionally be possible in those zoning districts, provided that those dwelling units are confined to 50% or less of the property, and further that a minimum of 50% of the property is perpetually preserved as open space, as described below under Section 6.14(A).

A. Minimum Open Space Required. In all developments proposed under the standards of this option, at least fifty (50) percent of the gross buildable area of the subject property must be perpetually preserved as open space. Gross buildable area is defined as that portion of the gross site area not containing open bodies of water, streams, 100-year floodplains, and wetlands (as defined by Charter Township of Oxford Ordinance No. 80B). This option may only be exercised in the R-3, SF-1, SF-2 and SF-3 zoning districts.

B. The following land areas shall not be applied toward satisfaction of the minimum open space requirement stated under sub-section A., above:

1. The area of any public road right-of-way or private road easement.

2. Unbuildable land, including wetlands (as defined by Charter Township of Oxford Ordinance No. 80B), 100-year floodplains, open bodies of water (except stormwater management facilities, as provided under Section 6.14(C)(4)) and streams.

3. Areas within developable lots.

4. Public or private golf courses.

5. Utility easements, unless the Planning Commission determines that the inclusion of the easement in the open space would contribute to the open space purposes of this section.

C. The following land areas may be applied toward satisfaction of the minimum open space requirement stated under sub-section A., above:

1. Uncleared areas of the site left in their natural condition.

2. Landscaped greenbelts.

3. Public and private parks developed with recreation amenities including but not limited to: landscaping, gazebos, benches, play equipment, pathways, and wildlife enhancements.

4. Stormwater management facilities, including detention, retention and sedimentation basins, up to 25% of the total amount of open space required under sub-section A., above.

5. Agriculturally-used land.

6. Utility easements, if the Planning Commission determines that the inclusion of the easement in the open space would contribute to the open space purposes of this section.

D. All open space preserved under this option shall be subject to the following provisions:

1. Open Space Standards. Open space intended to satisfy the minimum requirements stated under sub-section A., above, must adhere to the following standards:

a. Open space shall be centrally located, located along the road frontage of the development, located to preserve significant natural features, or located to connect open spaces throughout the development.

b. Open space provided along exterior public roads shall have a depth of at least fifty (50) feet, and be either landscaped or

left in a natural wooded condition. In either case, open space along exterior public roads shall be provided with a minimum of one (1) evergreen or canopy tree for each forty (40) feet of road frontage. Such plantings shall be planted in staggered rows or clustered into natural groupings to provide a natural appearance. Preservation of existing trees may be credited towards meeting this frontage landscaping requirement.

c. Open space must either be left in its natural condition, provided with recreational amenities, or landscaped. This shall not apply to stormwater management facilities applied toward open space requirements pursuant to Section 6.14(C)(4).

d. Connections with adjacent open space, public land or existing or planned pedestrian/bike paths may be required by the Planning Commission.

e. Open space must be accessible. Access can be provided via sidewalks, pathways or pedestrian easements throughout the development or where open space abuts road rights-of-way within the development.

f. Views of open spaces from lots and roads within the development are encouraged. For larger developments (over 100 residential units), the Planning Commission may require one or more unobstructed views of lakes or other areas as a condition of approval. Such views shall be composed of at least 100 contiguous lineal feet of road frontage having an unobstructed view of a lake or other landscape feature found acceptable to the Planning Commission.

g. Where lakes and ponds are located within or abut a development, the Planning Commission may require open space to provide lake access.

2. Preservation of Open Space. Open space shall be set aside by the developer through an irrevocable recorded document that is found acceptable to the Planning Commission and Township Board, such as:

a. Recorded deed restrictions;

b. Covenants that run perpetually with the land;

c. Dedication to a land conservancy approved by the Planning Commission; or,

d. A conservation easement established per the State of Michigan Natural Resources and Environmental Preservation Act, Public Act 451 or 1994, as amended (MCL 324.2140).

3. Preservation of open space as described above under 6.14(D)(2) shall assure that open space will be protected from all forms of development, except as shown on an approved site plan, condominium plan or plat and shall never be changed to another use. The recorded document utilized shall:

a. Indicate the proposed allowable use(s) of the preserved open space. The Planning Commission and Township Board may require the inclusion of open space restrictions that prohibit the following:

i. Dumping or storing of any material or refuse;

ii. Activity that may cause risk of soil erosion or threaten any living plant material;

iii. Cutting or removal of live plant material except for removal of dying or diseased vegetation;

iv. Use of motorized off-road vehicles;

v. Cutting, filling or removal of vegetation from wetland areas;

vi. Use of pesticides, herbicides or fertilizers within or adjacent to wetlands.

b. Require that the preserved open space be maintained by parties who have an ownership interest in the open space.

c. Provide standards for scheduled maintenance of the open space.

d. Provide for maintenance to be undertaken by Oxford Charter Township, at the Township's option, in the event that the preserved open space is inadequately maintained, or is determined by the Township to be a public nuisance, with the assessment of costs upon the property owners.

4. Continuing Obligation. The preserved open space shall forever remain open space, subject only to uses approved by the Township on the approved site plan. Further subdivision of open space land or its use for other than recreation, conservation or agricultural pur-

poses, except for easements for utilities and septic systems, shall be strictly prohibited.

5. Allowable Structures. Any structure(s) or building(s) accessory to a recreation or conservation use may be erected within the preserved open space, subject to the approved site plan. Accessory structures may include:

   a. Maintenance buildings;

   b. Recreation structures (gazebos, boardwalks, docks, etc.);

   These accessory structure(s) or building(s), together with their associated parking lots and access roads, shall not exceed, in the aggregate, one (1) percent of the required open space area.

E. Lot Size Reduction. The minimum lot width and lot area for lots in single-family detached residential developments, as stated in the Schedule of Regulations for each zoning district, may be reduced by up to fifty (50) percent when developed using the option provided under this sub-section. Further reduction in lot size and/or width may be permitted if the applicant demonstrates to the satisfaction of the Planning Commission that such reduction is necessary in order to achieve the number of lots or units conventionally feasible on the entire subject property. Every square foot of lot reduction proposed below the minimum lot area permitted for the district must be preserved as open space, and may be counted toward the minimum required open space described above under sub-section A., provided that it meets all other requirements of this Section. Required lot setbacks shall not be reduced.

F. Land shall not be developed using this option in a manner that would necessitate the extension of public sewer outside of the Township's established sewer district, unless the development of the land without the exercise of this option would also depend upon such an extension.

6.15 Seasonal and Temporary Outdoor Sales Operations. The outdoor sale of items on a non-permanent basis by persons other than the owner or tenant of the premises upon which such sales are proposed shall be subject to the standards of this Section. Outdoor sales of products on a permanent basis and/or accessory to a principal use of a property shall adhere to the provisions of Section 6.13. Seasonal or Temporary Sales Permits shall not be issued for properties that are in violation of this or any other Township ordinance**.**

A. Seasonal Outdoor Sales.

1. The sale of seasonal items shall be permitted within any non-residential zoning district upon issuance of a Seasonal or Temporary Sales Permit by the Building Official, pursuant to sub-section

C., below. Seasonal items shall include Christmas trees, pumpkins, produce considered to be "in season," and similar items whose sales depend upon a holiday or time of year, but shall not include fireworks.

2. The sale of seasonal items shall not exceed 90 days per year. Renewal of Seasonal or Temporary Sales Permits issued for such sales that occur on an annual basis shall require approval by the Building Official each season.

3. This Section shall not be construed to prohibit roadside stands selling agricultural products raised or grown on the same premises, as permitted in the AG and SF-1, 2 and 3 zoning districts

B. Other Temporary Outdoor Sales.

1. The sale of non-seasonal merchandise in the C-1 and C-2 zoning districts shall be permitted upon issuance of a Seasonal or Temporary Sales Permit by the Building Official, pursuant to sub-section C., below. Such sales in any other non-residential district shall be subject to Planning Commission review of the necessary Seasonal or Temporary Sales Permit. Such non-seasonal items shall include vehicles, fireworks, artwork, rugs and similar items.

2. The sale of non-seasonal items on a particular property shall be limited to seven (7) days per calendar month, and may be subject to one seven (7) day extension, as approved by the Building Official, provided that compliance with all other provisions of this Section is maintained. A permit issued for the sale of non-seasonal items shall not run continuously with such permits issued in a preceding or subsequent month on the subject property. Renewal of Seasonal or Temporary Sales Permits issued for such sales that occur on a repeat basis shall require approval by the Building Official for each occurrence.

C. Seasonal or Temporary Sales Permit Standards. A Seasonal or Temporary Sales Permit pursuant to this Section shall be issued by the Building Official or Planning Commission, as provided for in this section, upon review of sketch plan submitted by the petitioner demonstrating conformance with the provisions listed below. Failure to comply with these provisions shall constitute grounds for termination of an approved Seasonal or Temporary Sales Permit.

1. Setbacks. Seasonal or temporary outdoor sales activities shall adhere to required front yard setbacks, and may be located no closer than ten (10) feet to the side lot line where they abut non-residential

property, and no closer than twenty (20) feet where they abut residential property.

2. Access. Adequate ingress, egress and internal vehicular circulation areas shall be provided for seasonal or temporary sales activities. In no case shall a fire lane be occupied or otherwise obstructed by such activities.

3. Parking. Adequate parking shall be provided for seasonal or temporary sales activities. In no case shall such activities occupy parking areas necessary for the principal use of the property to satisfy ordinance requirements. Under no circumstances shall parking be located within a road right-of-way.

4. Impacts on Neighboring Property. Seasonal or temporary sales operations shall not be conducted in a manner that creates a nuisance to neighboring properties. Noise generated by such activities shall comply with Section 10.1(J). Lighting installed for such activities shall comply with Section 10.2.

5. Hours of Operation. Seasonal or temporary sales operations shall be limited to hours of 7:00 a.m. and 7:00 p.m., unless it is demonstrated to the satisfaction of the Planning Commission that earlier or later hours will not create unreasonable impacts on adjoining property.

6. Signage. Signage for seasonal or temporary sales operations shall comply with the standards for permanent free-standing signs of Section 9.8(D). Banner, streamers, and the like are prohibited pursuant to Section 9.4(G).

7. As a condition of the Seasonal or Temporary Sales Permit, the subject site shall be completely restored to its original condition within seven (7) days following the termination of the permitted Seasonal or Temporary Sale use or expiration of the permit, whichever occurs first. This shall include the removal of all equipment, shelving, signage and/or temporary structures. A $200.00 performance guarantee for such restoration activities shall be deposited with the Township at the time of application. Once the site has been restored, the guarantee shall be returned to the petitioner.

6.16 Structural Damage. Any structure or building which may be in whole or in part destroyed by fire, windstorm, or other such cause, if rebuilt, shall be rebuilt in accordance with this Ordinance and other pertinent codes and ordinances (except as provided under Article 15 for legally-existing non-conformities) or shall be returned to a safe and healthy condition with all debris removed from the site within one-hundred and eighty (180) days from the occurrence of such damage.

6.17 Television Satellite Antennas. Television satellite dish antennas shall be subject to the following requirements when being installed or constructed in any zoning districts:

A. Satellite dishes shall be considered accessory structures and must comply with all yard and height requirements in this Ordinance.

B. No satellite dish antenna including any platform or structure upon which the antenna is mounted shall extend more than three (3) feet above the highest portion of a roof.

C. The satellite dish antenna shall be permanently attached to a foundation or structure.

D. No part of the satellite dish antenna shall exhibit any commercial advertising other than a name or symbol not exceeding two (2) square feet.

E. A zoning permit must be obtained before any satellite dish antenna of over two (2) feet in diameter is constructed or installed.

6.18 Temporary Dwellings and Construction Offices. No garage, tent, trailer, basement, or similar fixed or moveable structure shall be used as a dwelling except under the following conditions:

A. A tent, travel trailer, motor home or similar enclosure may be occupied for periods up to thirty (30) days only within an approved and licensed campground or other overnight camping facility.

B. The owner of property in any district permitting single-family residential use may obtain approval from the Building Inspector for placement of one (1) mobile home on the property for not more than one hundred twenty (120) days from the date of issuance of a building permit, during the actual construction on the property of the owner's single family dwelling. The temporary dwelling shall be connected to an approved water supply and sewage disposal system.

C. After a building permit and zoning compliance permit have been issued for the construction of a principal building in any non-residential zoning districts, a temporary zoning compliance permit may be issued for the placement and use of a mobile home on the construction site of the principal building, subject to the following requirements:

1. The permit period shall not exceed one hundred twenty (120) days and shall specify the exact location of the mobile home. The temporary permit may be renewed for successive one hundred twenty (120) day periods provided the total shall not exceed three hundred sixty-five (365) days.

2. The mobile home shall be located not closer than ten (10) feet to any lot line.

3. If the mobile home is or will be on the lot for more than fifteen (15) days, it shall be connected to waste disposal and water supply systems.

4. The permit shall identify the persons intended to occupy the mobile home; occupancy by any person not so identified is prohibited.

5. These provisions are intended to facilitate the management and security of premises under construction. If an administrative official finds, on the basis of information furnished to him, that these purposes will not be reasonably carried out by the intended use, he shall deny the permit; in which case, the applicant may apply to the Board of Appeals for relief from the decision of the administrative official.

6.19 Temporary Sales Offices. The Charter Township of Oxford prohibits business activity in residential districts, except for the exceptions contained within this Ordinance. This Section is intended to address the specific needs of a subdivision during its development and construction phase.

A. Definitions. As contained in this Section, the following terms shall have the following meanings:

1. Additional Permitted Use: A use which directly involves and relates to the subdivision or, if applicable, the Development Project in which the Sales Office is located.

2. Development Project: A residential development consisting of one or more Subdivision where the subdivision lands and contiguous or otherwise connected and related.

3. Model Home: A structure, or unit thereof, constructed for eventual use as a single-family residence, but used temporarily as a sample of such residences for display to prospective residence purchasers.

4. Sales Office: An office used for the sale of property and/or homes and Additional Permitted Uses within the subdivision where the Model Home Sales Office is located and, if applicable, the Development Project, and situated within either a Model Home or a Trailer.

5. Subdivision: A parcel of land divided under the Land Division Act, Public Act 288 of 1967, or the Condominium Act of the State of Michigan.

6. Trailer: A mobile and/or temporary structure placed temporarily at a

subdivision.

B. Applications.

1. Each applicant for a license for use of a Sales Office must submit an application to the building department on a form supplied by the Township. The applicant, through a person authorized on behalf of the entity making the application, shall verify on the application all information required, including:

   a. Name of the applicant

   b. Address of applicant's principal place of business

   c. Telephone number of the applicant's principal place of business

   d. Contact person at the applicant's principal place of business

   e. Position of the person making the application on behalf of the applicant

   f. In the case of a corporate applicant, the resolution of the applicant authorizing the person to make the application

   g. Identity of the Subdivision for which the Sales Office shall serve

   h. A representation that no use except as authorized in the Zoning District in which the Sales Office is located shall take place including a representation that no commercial activity concerning another Subdivision will take place from the Sales Office except for the subdivision in which the sales offices is located, or except for any other Additional Permitted use

   i. Days of the week and hours of the day the Sales Office will be operational

   j. The address, fax and phone number of the person to whom notice to the applicant can be sent by the Township

   k. The position of each person who will occupy the Sales Office the days of the week and hours of occupancy

   l. A consent by the applicant during the term of the license for

the Township representative(s) to inspect, during the proposed hours of operation, the activity taking place in the Sales Office and to speak with applicant's agents, representatives and employees at the Sales Office and those persons who use the Sales Office regarding the use of the Sales Office

2. Each application must be accompanied by a non-refundable application fee in an amount established by resolution of the Township Board.

C. Sales Offices Permitted. Subject to the following provisions, the zoning administrator, upon receipt of a proper application, may issue a license for a Sales Office, which shall be permitted subject to the following provisions:

1. Only one Sales Office may be permitted for each Subdivision, except that in the case of a Development Project, then, in addition, there may be one additional Sales Office for the entire Development Project. No additional Sales Offices shall be permitted for additional Subdivision phases.

2. No use shall be allowed from or in the Sales Office except as specifically authorized by the Zoning District in which the Sales Office is located except an Additional Permitted Use.

3. All Model Homes shall be located on a parcel of land identified by its own sidwell number so as to permit that Model Home to otherwise meet all requirements of Oxford Township Zoning Ordinance including setbacks and frontage on approved streets.

4. Water and Sewer.

a. All Model Homes containing a Sales Office shall be serviced by a permanent potable water supply and a sewerage system, approved by the Township.

b. All Trailers containing a Sales Office shall be serviced by a temporary potable water supply and a temporary sewerage system as approved by the Township, and the applicant shall post at the Township sufficient security, in the form of cash or a letter of credit, to ensure the removal and closure of the temporary systems and facilities.

5. Duration and Renewal.

   a. Trailer Sales Offices: The duration of the license shall be the shorter of the following:

      i. Until the construction and final inspection of a Model Home to be used for a Sales Office.

      ii. Until the expiration of six (6) months from the date of license issuance. A license for an additional three (3) months may be issued upon review and approval of the zoning administrator if it is demonstrated that there is good ground for the failure to complete construction of a model home for sales purposes within the initial six-month period.

      iii. Until there is a change in one or more statements contained on the application if the applicant fails to inform the Township of the change of facts, and if the change in facts establishes that the applicant is no longer entitled to a license under this Section.

   b. Model Home Sales Offices: The duration of the license shall be the shorter of the following:

      i. Until all homes within the subdivision have been initially sold; or

      ii. Until the expiration of eighteen (18) months from the date of issuance of the license, with such licenses being renewable upon approval of the zoning administrator until such time as all homes within the subdivision have been initially sold.

      iii. Until there is a change in one or more statements contained on the application if the applicant fails to inform the Township of the change of facts, and if the change in facts establishes that the applicant is no longer entitled to a license under this Section.

6. Landscaping shall be provided for the Trailer and the trailer site, or the Model Home.

7. Signage in accordance with Section 9.7(F) shall be permitted.

8. Any lighting shall not interfere with traffic or be a hazard to drivers

in the vicinity and shall be focused on the trailer site.

9. Special Provisions for Trailers. The following provisions shall apply only to Trailers, and not Model Homes.

   a. Adequate Security in the form of cash or a Letter of Credit shall be required to ensure the continued maintenance and removal of the Trailer.

   b. The Trailer shall be appropriately screened and skirted.

   c. A temporary driveway and parking area with a minimum of five (5) parking spaces shall be provided on the Trailer site. The driveway and parking area shall be surfaced at a minimum with gravel or other similar material.

D. Violation and Revocation of License.

1. Upon fourteen (14) days notice to the applicant of a violation of this Section, if the violation has not been cured the license for the Sales Office shall be revoked and all reports of occupancy and Permitted and Additional Permitted Uses shall terminate at and from the Sales Office or in the alternative, the Oxford Township Board may, prior to revocation, notify the applicant to appear before the Board to provide testimony and evidence why the license should not be revoked.

E. Additional Penalty and Remedies as provided in this Ordinance. This provision shall not impair any other penalties for violation of this Ordinance, or any other remedy available to the Township for violations of this Ordinance.

6.20 Trash.

A. Dumpster Enclosures.

1. Dumpsters, trash compactors and similar waste receptacles shall be enclosed on three (3) sides by a screen wall or fence with a completely obscuring gate on the fourth side. Such screening shall be of a height equal to or greater than the trash receptacle itself. The screening requirements of this Section shall not apply to single-family residences.

2. Gates on required dumpster enclosures shall remain closed at all times except when actual loading and unloading of waste occurs.

3. In locating trash receptacle facilities, primary consideration shall be given to access for service, minimizing on-site traffic congestion, and minimizing visibility or other negative impacts to the site or adjoining properties.

4. Materials used for dumpster enclosures shall be architecturally compatible with the principal building on the property.

5. Protective bollards shall be provided within and in front of required dumpster enclosures to prevent damage during unloading.

6. The Planning Commission may further require internal storage and/or the use of trash compactors where, in the determination of the Planning Commission, the public health, safety, and welfare is served.

7. The Planning Commission may modify or waive the required screening when they determine that no significant negative effects will result from the waiver of such screening.

B. Construction Debris. A temporary trash and construction debris storage area shall be required to be located on the site of all construction and renovation projects for the duration of the project. All trash and construction debris shall be enclosed within such storage area, and periodically removed from the construction site, in a fashion sufficient to prevent it from blowing onto adjacent property. All trash and debris shall be removed from the property and disposed of properly.

6.21 Unlawful Buildings, Structures, Site Designs and Uses. A building, structure or use which was not lawfully existing at the time of adoption of this ordinance shall not be made lawful solely by the adoption of this Ordinance. In case any building, or part thereof, is used, erected, occupied or altered contrary to the provisions of this Ordinance, such building or use shall be deemed an unlawful nuisance and may be required to be vacated, torn down or abated by any legal means, and shall not be used or occupied until it has be made to conform to the provisions of this Ordinance. Public expenditures toward abating any such nuisance shall become a lien upon the land.

6.22 Unsafe Buildings. Nothing within this Ordinance shall be construed to prevent compliance with an order by the appropriate authority to correct, improve, strengthen, or restore to a safe or healthy condition, any part of a building or premises declared unsafe or unhealthy.

6.23 Water Supply and Sewage Disposal.

A. Every building and principal structure hereafter erected, or moved upon any premises and used in whole or in part for dwelling, recreational, camping, business, commercial, or industrial purposes, including churches,

schools, and other buildings and structures in which persons customarily congregate shall be provided with a safe and sanitary water supply, and safe means of sewage collection and disposal, in accordance with the rules and regulations of the appropriate local, County and State departments and agencies. All industrial wastes shall be pre-treated for hazardous contents. Under no conditions shall such waste be deposited upon the surface of the ground or in lagoons in such manner as to create a nuisance or health hazard.

B. Every dwelling hereafter erected, altered or moved shall be connected to a public sanitary sewer or to a private sewage disposal system approved by the Oakland County Health Department.

6.24 Keeping of Farm Animals. The keeping of farm animals, where permitted pursuant to Section 3.6, shall adhere to the following standards:

A. Applicability. The regulations of this sub-section shall apply to all properties upon which farm animals are kept, with the exception of bona fide farm operations protected in accordance with the Right to Farm Act (P.A. 93 of 1981).

B. Density of Animals Allowed. The aggregate number of farm animals that may be kept on a property shall be governed by the Right to Farm Act Generally Accepted Agricultural and Management Practices (GAAMP) Standards, as amended.

C. Animals shall be maintained and accommodated in a manner so as to not pose a nuisance.

6.25 Wind Energy Conversion Systems.

A. Intent. It is the intent of the Charter Township of Oxford to promote the effective and efficient use of Wind Energy Conversion Systems (WECS) by regulating the siting, design, and installation of such systems to protect the public health, safety, and welfare in no case shall this Ordinance guarantee the wind rights or establish access to the wind.

B. Approval Required. Except where noted in this Section, it shall be unlawful to construct, erect, install, alter, or locate any WECS project within Oxford Township unless approval for a:

1. Agricultural WECS. See Section 6.25.C.

2. Private WECS. A permit has been obtained from the Building Department.

3. Commercial WECS. A Special Land Use has been obtained pursuant to Article 4 and this Section.

4. Temporary WECS. A permit has been obtained from the Building Department.

C. Agricultural Exemption. Agricultural WECS projects accessory to permitted farm and agricultural operations shall be exempt from the requirements of this Section with the exception of (D)(2) below. Agricultural WECS projects shall conform to the regulations of the zoning district.

D. General Standards. The following standards shall apply to wind energy conversion systems in Oxford Township:

1. Design Safety Certification. The safety of the design of all WECS structures shall comply with all current applicable State of Michigan guidelines and standards.

2. Setbacks. All private and commercial WECS structures must be setback from property lines at a distance equal to or greater than the height of the structure, measured from the base of the structure to the highest reach of the blade.

3. Interference. All WECS structures shall be certified by the manufacturer to minimize or mitigate interference with existing electromagnetic communications, such as radio, telephone, microwave or television signals.

4. Noise Levels. The noise level for either a private or commercial WECS structure shall comply with the standards set forth in Section 10.1.J – Noise.

E. Additional Standards for Commercial WECS Structures. The following additional standards shall apply to all commercial wind energy conversion systems in Oxford Township.

1. Color. Towers and blades shall be a non-reflective neutral color.

2. Controls and Brakes. All commercial WECS structures shall be equipped with manual and automatic controls to limit rotation of blades to a speed below the designed limits of the WECS. The Professional Engineer must certify that the rotor and overspeed control design and fabrication conform to applicable design standards. No changes or alterations from certified design shall be permitted unless accompanied by a Professional Engineer's statement of certification.

3. Compliance with FAA. It shall be the responsibility of the applicant to obtain the appropriate FAA permits for the WECS structure, or to obtain a determination of no significant impact to air navigation from the FAA.

4. Climb Prevention. All commercial WECS structures must be protected by anti-climbing devices.

5. Warnings. A visible warning sign of High Voltage may be required to be placed at the base of all commercial WECS structures. The sign must have at a minimum of six (6) inch letters with ¾ inch stroke. Such signs shall be located a maximum of three hundred (300) feet apart and at all points of site ingress and egress.

6. Performance Bond. The Township shall have on file a performance bond for removal of a commercial structure. The value of the bond shall be in the amount given prior to construction for the cost of removal and any other costs deemed necessary by the Township.

7. Removal. A condition of every approval of a commercial WECS shall be adequate provision for removal of all or part of the facility by users and owners upon the occurrence of one or more of the following events:

    a. When the facility has not been used for 180 days or more. For purposes of this section, the removal of equipment from the facility, or the cessation of operations (transmission of electrical power or prolonged periods of no movement of the WECS) shall be considered as the beginning of a period of nonuse.

    b. Six months after new technology is available at reasonable cost, as determined by the Planning Commission, which permits the operation of the WECS without the requirement of the support structure.

    c. The situations in which removal of a facility is required, as set forth in paragraphs “a” and “b” above, may be applied and limited to portions of a facility.

    d. Upon the occurrence of one or more of the events requiring removal, the property owner or persons who had used the facility shall immediately apply for any required demolition or removal permits, proceed with, and complete the demolition/removal.

e. If the required removal of a facility or a portion thereof has not been lawfully completed within sixty (60) days of the applicable deadline, and after at least thirty (30) days written notice, the Township may remove or secure the removal of the facility or required portions thereof, with its actual cost and reasonable administrative charge to be drawn, collected and/or enforced from or under the security posted at the time of application.

ARTICLE 7
LANDSCAPING, SCREENING, FENCES AND WALLS

7.1 Contents. For ease of use, the sub-sections of this chapter are outlined below:

7.1 Contents

7.2 Intent and Scope of Requirements.

7.3 Specific Landscaping Requirements for Zoning Districts.

- A. Requirements for Commercial, Office and Industrial Districts.
- B. Requirements for Multiple Family Residential Districts.
- C. Requirements for Non-Residential Uses in Residential Districts.

7.4 General Landscaping Standards.

- A. General Site Requirements.
- B. Landscaping Adjacent to Roads.
- C. Berms.
- D. Greenbelts.
- E. Screening.
- F. Parking Lot Landscaping.
- G. Landscaping of Rights-of-Way.
- H. Maintenance of Unobstructed Visibility for Drivers.
- I. Potential Damage to Utilities.
- J. Landscaping of Divider Medians.

7.5 Standards for Landscape Materials.

7.6 Installation and Maintenance.

7.7 Treatment of Existing Plant Material and Landscape Improvements.

7.8 Modifications to Landscape Requirements.

7.9 Landscape Plan Submission Requirements.

7.10 Fence and Wall Standards.

7.2 Intent and Scope of Requirements.

A. Intent. Landscaping enhances the visual image of the Charter Township of Oxford, preserves natural features, improves property values, and alleviates the impact of noise, traffic, and visual distraction associated with certain uses. Screening is important to protect less intensive uses from the noise, light, traffic, litter and other impacts of more intensive, nonresidential uses. These provisions are intended to set minimum standards for the design and use of landscaping, greenbelts, and screening, and for the pro-

tection and enhancement of the Township's environment. More specifically, the intent of these provisions is to:

1. Improve the appearance of off-street parking areas, vehicular use areas, and property abutting public rights-of-way,

2. Protect and preserve the appearance, character, and value of the neighborhoods that abut non-residential areas, parking areas, and other intensive use areas, thereby protecting the public health, safety and welfare,

3. Reduce soil erosion and sedimentation, and

4. Increase stormwater infiltration, thereby helping to prevent flooding.

5. It is also the intent of this section to encourage the use of desirable native plant species for all landscaping, including but not limited to, foundation plantings, lawn areas, screening and greenbelt areas, and surface stormwater conveyance features. Encouraging the use of native plants in this Ordinance is based on the following:

    a. Native plants are a necessary part of the proper functioning of natural ecosystems within the Charter Township of Oxford and perform tasks including, but not limited to, stormwater attenuation, uptake and purification, air purification, wildlife food and habitat, and community character and aesthetics; and

    b. Landscaping with native plants encourages environmentally-sound maintenance practices by requiring little or no pesticide or fertilizer use, and minimal watering once plants are established, which, in turn, reduces the threat of environmental degradation; and

    c. The Township has stated in its Master Plan the goal to preserve the natural features and character of Township lands and protect the quality of vital Township air, land and water resources; and to encourage the uses of desirable native species of vegetation.

B. Scope of Application. No site plan shall be approved unless it shows landscaping and screening consistent with the requirements of this Section. A building permit shall not be issued until the required landscape plan is submitted and approved, and a certificate of occupancy shall not be issued unless provisions set forth in this Section have been met or a performance guarantee has been posted. The requirements in this Article shall not apply to single family detached homes, unless otherwise specifically noted.

C. Minimum Requirements. The requirements in this Section are minimum requirements, and under no circumstances shall they preclude the developer and the Township from agreeing to more extensive landscaping.

D. Design Creativity. Creativity in landscape design is encouraged. Accordingly, required trees and shrubs may be planted at uniform intervals, irregular intervals, or in groupings, depending on the designer's desired visual effect and, equally important, the intent of the Township to coordinate landscaping on adjoining properties.

E. Summary of Regulations. The following table summarizes the landscaping regulations contained in this Section:

Summary of Minimum Landscape Requirements[1]

	Min. Height	Min. Width	Deciduous or Ever-green Trees	Ornamental Trees	Deciduous or Ever-green Shrubs	Landscaping Island Ratio
General Site Landscaping Sec. 7.4(A)	--	--	1 per 3,000 sq. ft.	--	--	--
Landscaping Adjacent to Roads Sec. 7.4(B)	--	20 ft.	1 per 30 lin-eal ft.	1 per 100 lineal ft.	5 per 30 lin-eal feet	--
Greenbelts Sec. 7.4(D)	--	20 ft.	1 per 30 lin-eal ft.	--	[2]	--
Greenbelts used for Screening Sec. 7.4(B) & (E)	6 ft.	20 ft.	[3]	--	--	--
Berms in Front Yard Sec. 7.4(B)	[4]	[4]	1 per 30 lin-eal ft.	1 per 100 lineal ft.	5 per 30 lin-eal ft.	--
Berms used for Screening Sec. 7.4(C) & (E)	3 ft. [5]	[4]	[3]	--	--	--
Parking Lot Landscaping Sec. 7.4(F)	--	5 ft.[6]	1 per 300 sq. ft.	--	--	20 sq. ft. per space

1 See Sections 7.3 and 7.4 for detailed requirements.

2 Five (5) shrubs may be substituted for each tree.

3 Evergreens must be closely spaced (no further than fifteen (15) feet apart) to form an 80% visual barrier in summer and 60% visual barrier in winter within three (3) years.

4 See Section 7.4(C). for detailed requirements.

5 Berms used to screen parking areas from view from the road shall not exceed 3 ft., per Sections 7.3(A)(3), 7.3(B)(3), and 7.3(C)(3).

6 Minimum area of each parking lot landscaped area: 200 sq. ft.

7.3 Specific Landscaping Requirements for Zoning Districts.

A. Requirements for Commercial, Office, and Industrial Districts. All lots or parcels of land located in the C-1, C-2, O, RO, I-1 and I-2 zoning districts shall comply with the following landscaping requirements:

1. General Site Landscaping. All undeveloped portions of the site not already containing specific landscape requirements shall conform to the General Site Requirements in Section 7.4(A).

2. Landscaping Adjacent to Road. All commercial, office, and industrial developments shall comply with the requirements for landscaping adjacent to the road in Section 7.4(B).

3. Screening of Off-Street Parking. A berm may be used to screen off-street parking from view of the road, in which case the berm shall be a maximum of three (3) feet in height, and shall be planted in accordance with Section 7.4(B). The berm shall be located totally on private property, adjacent to the road right-of-way.

4. Screening Between Conflicting Land Uses. Screening in the form of a landscaped berm, greenbelt, or wall shall be required wherever a non-residential use in a commercial, office, or industrial district abuts directly upon land zoned or used for residential purposes, and where loading areas would be visible from residential districts. Landscaped screening shall comply with the requirements in Section 7.4(E). If a wall is used instead of landscaping, the requirements in Section 7.10 shall be complied with, but a landscaped greenbelt conforming to Section 7.4(D) shall be required on the side of the wall facing the residential district.

5. Greenbelts. Except where screening is required, a landscaped greenbelt shall be provided along side and rear property lines in accordance with Section 7.4(D).

6. Parking Lot Landscaping. Off-street parking areas containing greater than twenty (20) spaces shall comply with the requirements for parking lot landscaping in Section 7.4(F).

Figure 1
Landscaping Requirements for Commercial, Office and Industrial Districts

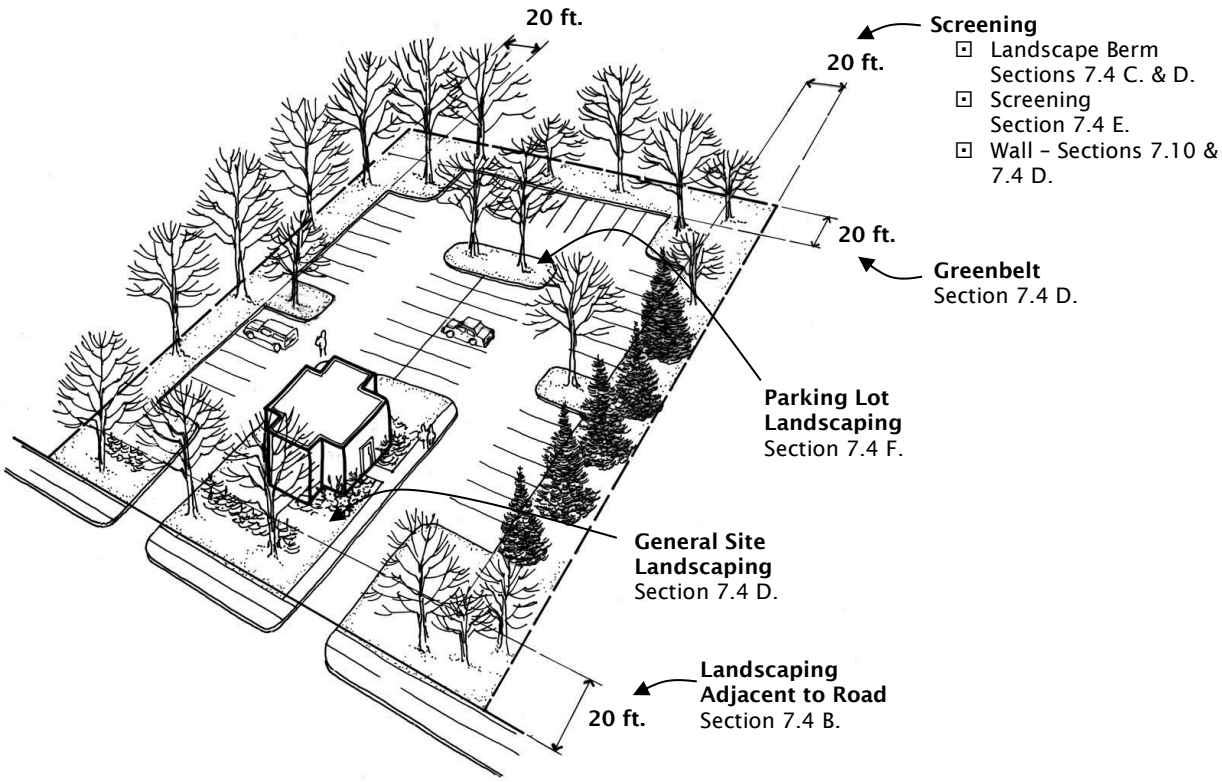

B. Requirements for Multiple Family Residential Districts. All lots or parcels of land located in the RM zoning district shall comply with the following landscaping requirements:

1. General Site Landscaping. All undeveloped portions of the site not already containing specific landscape requirements shall conform to the General Site Requirements in Section 7.4(A).

2. Landscaping Adjacent to Road. All multiple family developments shall comply with the requirements for landscaping adjacent to the road in Section 7.4(B).

3. Screening of Off-Street Parking. A berm may be used to screen off-street parking from view of the road, in which case the berm shall be a maximum of three (3) feet in height, and shall be planted in accordance with Section 7.4(B). The berm shall be located totally on private property, adjacent to the road right-of-way.

4. Screening Between Conflicting Land Uses. Screening in the form of a landscaped berm, greenbelt, or wall shall be required on all sides of a multiple family development abutting land zoned or used for single family residential purposes. Landscaped screening shall comply with the requirements in Section 7.4(E). A wall may be used instead of landscaping adjacent to nonresidential districts, subject to the requirements in Section 7.10. If a wall is used instead of landscaping, the requirements in Section 7.10 shall be complied with, but a landscaped greenbelt conforming to Section 7.4(D) shall be required on the side of the wall facing the residential district.

5. Greenbelts. Except where screening is required, a landscaped greenbelt shall be provided along side and rear property lines in accordance with Section 7.4(D).

6. Parking Lot Landscaping. Off-street parking areas containing greater than ten (10) spaces shall comply with the requirements for parking lot landscaping in Section 7.4(F).

7. Privacy Screen. Where multiple family dwellings are designed so that rear open areas or patio areas front onto a public street, a landscaped privacy screen shall be provided. The screen may consist of a combination of trees, shrubs, and berms, subject to review by the Planning Commission.

Figure 2
Landscaping Requirements for Multiple Family Residential Districts

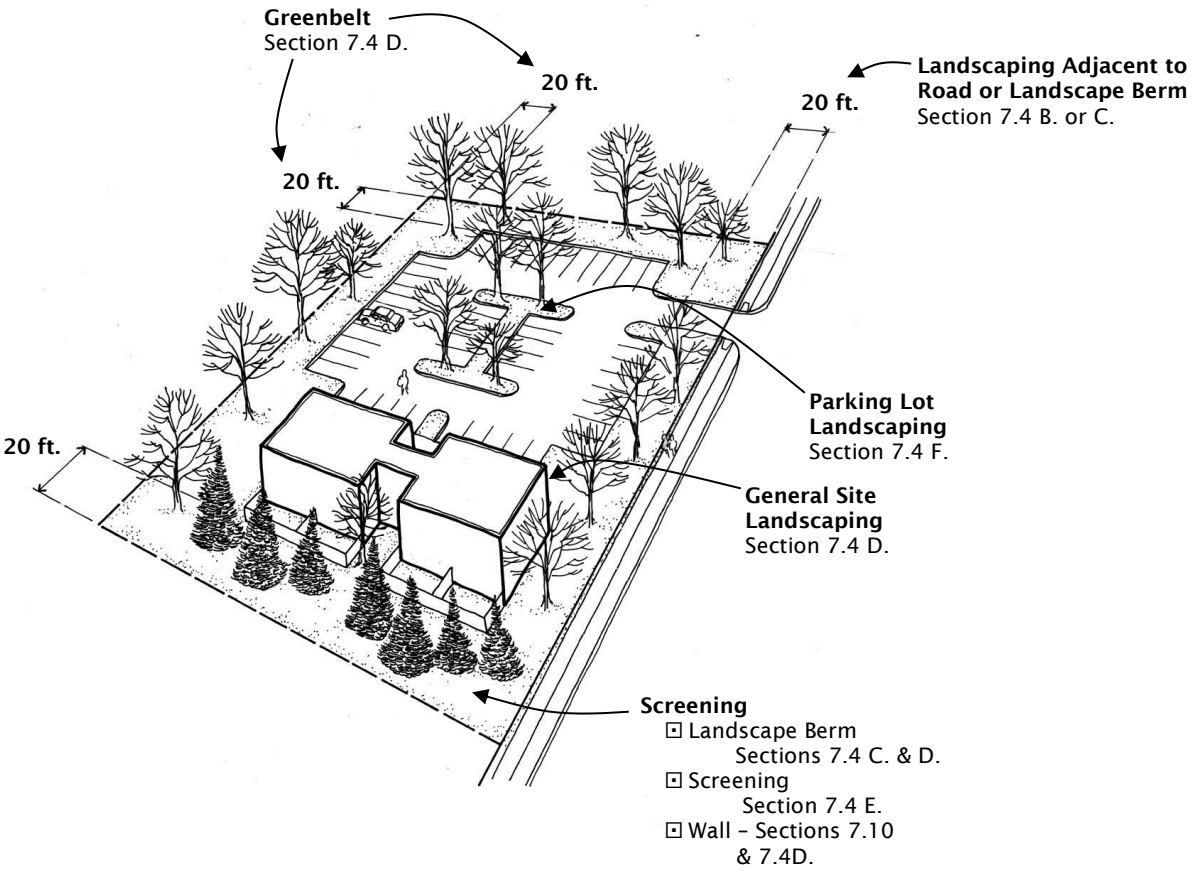

C. Requirements for Non-Residential Uses in Residential Districts. All non-residential uses developed in residential zoning districts shall comply with the following landscaping requirements:

1. General Site Landscaping. All undeveloped portions of the site not already containing specific landscape requirements shall conform to the General Site Requirements in Section 7.4(A).

2. Landscaping Adjacent to Road. All non-residential developments located in residential districts shall comply with the requirements for landscaping adjacent to the road in Section 7.4(B).

3. Screening of Off-Street Parking. A berm may be used to screen off-street parking from view of the road, in which case the berm shall be a maximum of three (3) feet in height, and shall be planted

in accordance with Section 7.4(B). The berm shall be located totally on private property, adjacent to the road right-of-way.

4. Screening Between Conflicting Land Uses. Screening in the form of a landscaped berm, greenbelt, or wall shall be required wherever a non-residential use abuts directly upon land zoned or used for residential purposes. Landscaped screening shall comply with the requirements in Section 7.4(E). If a wall is used instead of landscaping, the requirements in Section 7.10 shall be complied with, and a landscaped greenbelt conforming to Section 7.4(D) shall be provided on the side of the wall facing the residential district.

5. Greenbelts. Except where screening is required, a landscaped greenbelt shall be provided along side and rear property lines in accordance with Section 7.4(D).

6. Parking Lot Landscaping. Off-street parking areas containing greater than ten (10) spaces shall comply with the requirements for parking lot landscaping in Section 7.4(F).

Figure 3
Landscaping Requirements for Non-Residential Uses in Residential Areas

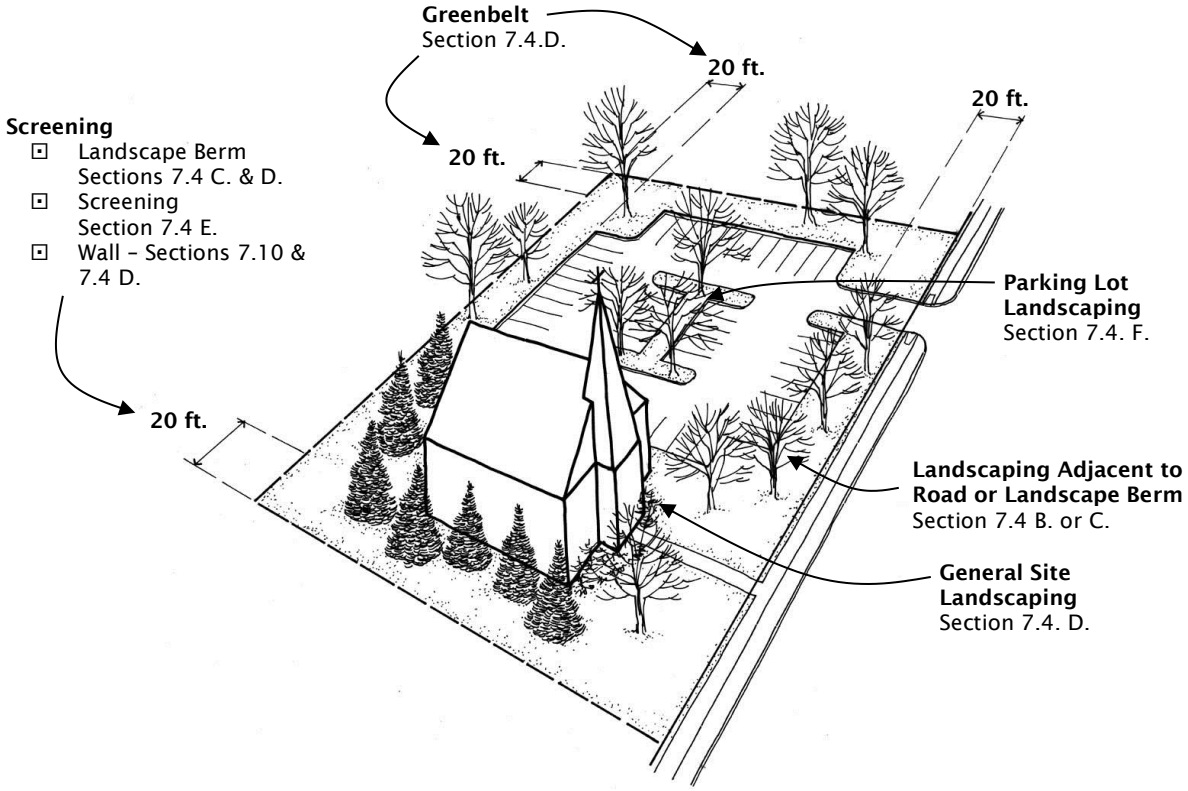

7.4 General Landscaping Standards.

A. General Site Requirements. All undeveloped portions of the site shall conform to the following general landscaping standards, except where specific landscape elements, such as greenbelts, berms, parking lot landscaping, landscaping along roadways or screening are required:

1. All undeveloped portions of the site shall be planted with grass, ground cover, landscape mulch, shrubbery, landscape stone, or other suitable live plant material, which shall extend to any abutting street pavement edge. Grass areas in the front yard of all non-residential uses shall be planted with sod**,** hydro-seed, or conventional seed with mulch blankets.

2. A mixture of evergreen and deciduous trees shall be planted on non-residential parcels at the rate of one (1) tree per 3,000 square feet or portion thereof of any undeveloped open area for which specific landscaping requirements do not appear elsewhere in this chapter. Required trees may be planted at uniform intervals, irregular intervals, or in groupings.

B. Landscaping Adjacent to Roads

1. Planting Requirements. Where required, landscaping adjacent to public and private roads shall comply with each of the following planting requirements:

Planting Type	Requirement
Deciduous or Evergreen Trees	1 per 30 lineal feet of road frontage
Ornamental Trees	1 per 100 lineal feet of road frontage
Shrubs	5 per 30 lineal feet of road frontage

For the purposes of computing length of road frontage, openings for driveways and sidewalks shall not be counted. Trees and shrubs may be planted at uniform intervals, irregular intervals, or in groupings.

2. Location and Dimensions. Required landscaping adjacent to public and private roads shall be located totally on private property within a planting strip adjacent to the road right-of-way, planted in accordance with the requirements for intersection visibility under Section

8.3. The minimum width of the planting strip shall be twenty (20) feet.

Figure 4
Landscaping Adjacent to Roads

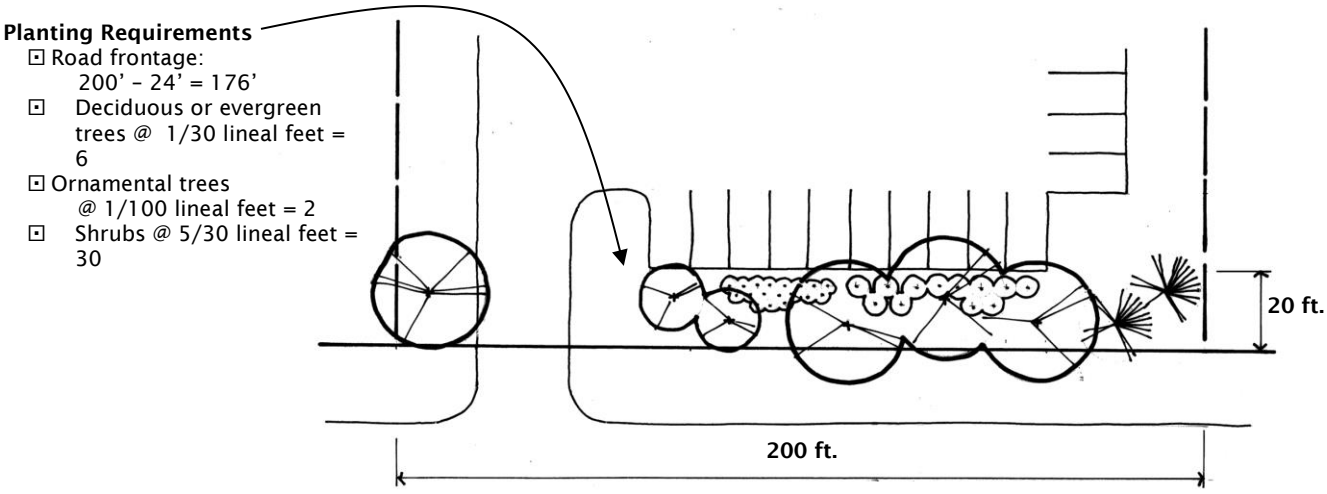

C. Berms. When proposed, berms shall conform to the following standards:

1. Dimensions. Unless otherwise indicated or appropriate, required berms shall be measured from the grade of the parking lot or flat ground adjacent to the berm, and shall be constructed with slopes no steeper than one (1) foot vertical for each three (3) feet horizontal (33 percent slope), with at least a two (2) foot flat area on top. Berms may undulate in height, subject to review and approval of berm design as shown on the site plan. All berms shall conform to the requirements for intersection visibility under Section 8.2.

2. Protection from Erosion. Any required berm shall be planted with sod, ground cover, or other suitable live plant material to protect it from erosion so that it retains its height and shape**.**

3. Required Plantings

   a. Berms located in the front yard of non-residential parcels shall be landscaped in accordance with the requirements for Landscaping Adjacent to Roads, Section 7.4.B.

   b. Berms used for screening other than in the front yard shall be landscaped in accordance with the requirements for Screening, Section 7.4(E).

Figure 5
Berms

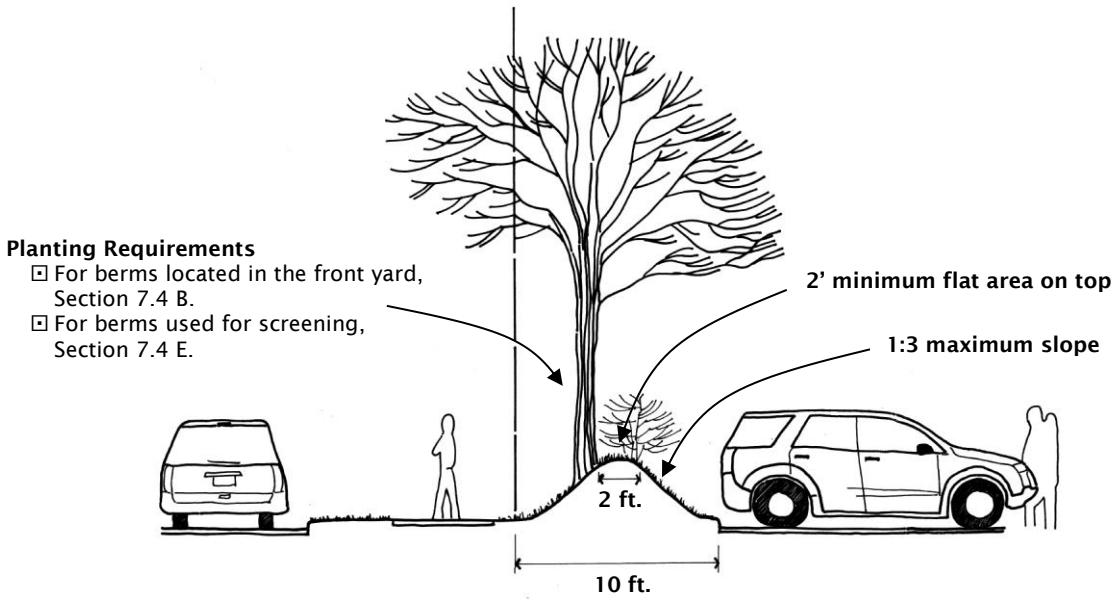

4. Measurement of Berm Length. For the purposed of calculating required plant material, berm length shall be measured along the exterior edge of the berm.

D. Greenbelts. A twenty (20) foot greenbelt shall be required along the side and rear property lines of all nonresidential developments. Greenbelts shall conform to the following standards:

1. Location. Required greenbelts shall be located between the property line and any developed or paved area, including parking areas, access drives and buildings.

2. Measurement of Greenbelt Length. For the purposes of calculating required plant material, greenbelt length shall be measured along the exterior edge of the greenbelt.

3. General Planting Requirements

a. Ground Cover Requirements. Grass, landscape mulch, landscape stone, or other suitable live plant material shall be planted over the entire greenbelt area, except where paved walkways are used.

b. Tree and Shrub Requirements. Except where the greenbelt is used for screening, a minimum of one (1) deciduous or evergreen tree shall be planted for each thirty (30) lineal feet or portion thereof of required greenbelt, or, alternatively, five (5) shrubs may be substituted for each required tree. Trees and shrubs may be planted at uniform intervals, irregular intervals, or in groupings.

c. Distance from Sidewalk. Plant materials shall not be placed closer than four (4) feet to the right-of-way line where the greenbelt abuts a public sidewalk.

4. Greenbelts Used for Screening. Greenbelts used for screening shall be landscaped in accordance with the requirements for Screening, Section 7.4(E).

Figure 6
Greenbelt Along Side & Rear Property Lines

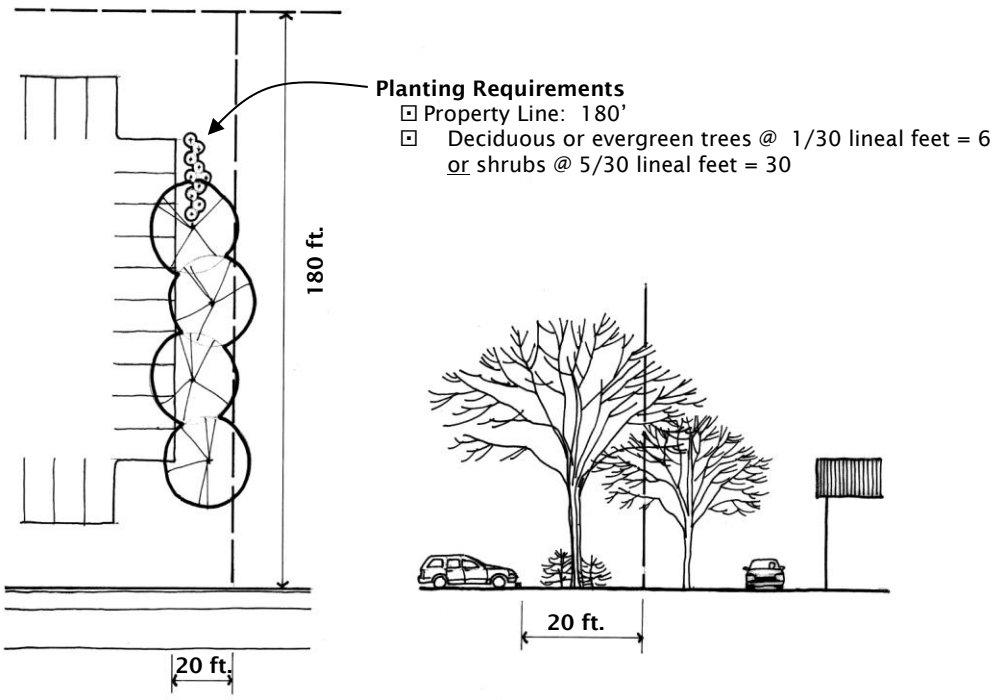

E. Screening

1. Screening Requirements between Conflicting Land Uses. Unless otherwise specified, wherever an evergreen or landscaped screen is required, screening shall consist of closely-spaced evergreen

plantings (i.e., no farther than fifteen (15) feet apart) which can be reasonably expected to form an eighty (80) percent visual barrier in summer and sixty (60) percent visual barrier in winter, that is at least six (6) feet above ground level within three (3) years of planting. Deciduous plant materials may be used provided that an eighty (80) percent visual barrier in summer and sixty (60) percent visual barrier in winter is maintained. Wherever screening is required adjacent to residentially zoned or used property, the screening shall be installed as soon as practicable in relation to site grading and general construction activities.

2. Screening of Equipment. Mechanical equipment, such as air compressors, pool pumps, transformers, sprinkler pumps, satellite dish antennae, and similar equipment shall be screened on at least three (3) sides. Insofar as practical, said screening shall exceed the vertical height of the equipment being screened by at least six (6) inches within two (2) years of planting.

Figure 7
Screening Between Conflicting Land Uses

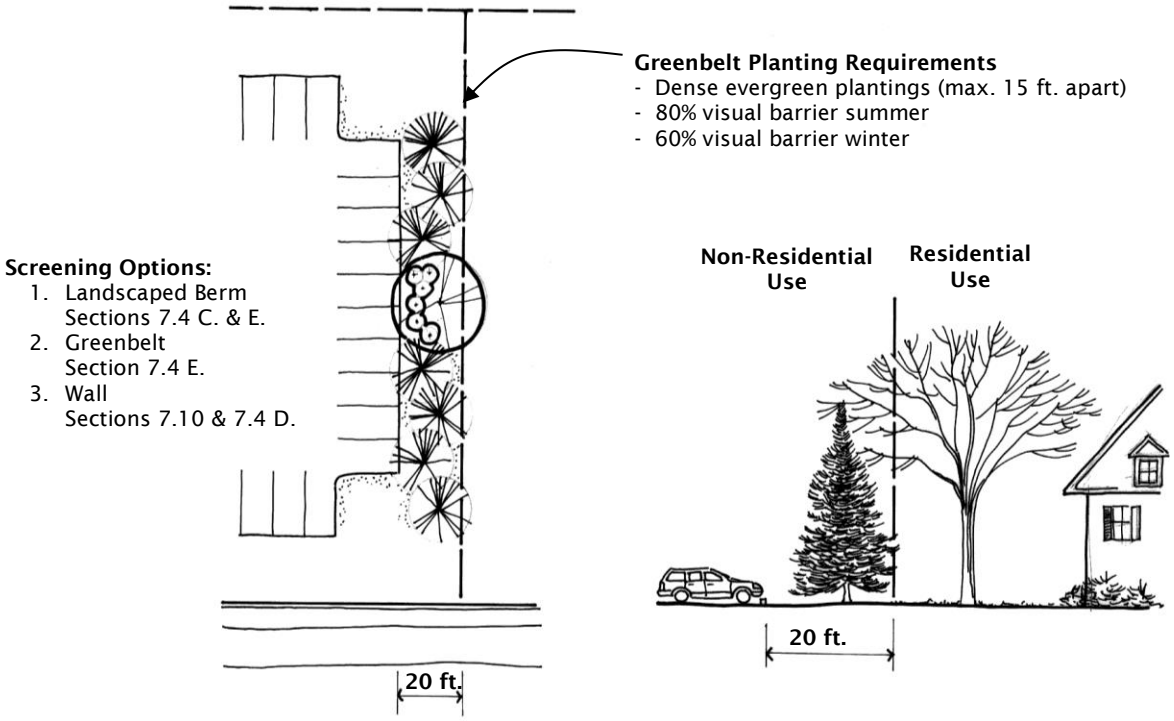

F. Parking Lot Landscaping. In addition to required screening, all off-street parking areas shall be landscaped as follows:

1. Landscaping Ratio. Off-street parking areas containing greater than twenty (20) spaces shall be provided with at least twenty (20) square feet of interior landscaping per parking space. Landscaping around the perimeter of the lot shall not satisfy this requirement. Suitable interior parking lot landscaping is illustrated below in Figure 8. Wherever possible, parking lot landscaping shall be designed to improve the safety of pedestrian and vehicular traffic, guide traffic movement, break up the expanse of pavement, create shade, and improve the appearance of the parking area.

2. Minimum Area. Landscaped areas in parking lots shall be no less than five (5) feet in any single dimension and no less than two hundred (200) square feet in area. Landscaped areas in or adjacent to parking lots shall be protected with curbing or other means to prevent encroachment of vehicles.

3. Other Landscaping. Landscaping provided to satisfy other requirements elsewhere on the parcel shall not be counted in meeting the parking lot landscaping requirements.

4. Required Plantings. Requirements for plant material shall be based on the location, size, and shape of the parking lot landscaped area. A minimum of one (1) tree shall be planted per three hundred (300) square feet or fraction thereof of interior landscaped area. At least fifty percent (50%) of each interior landscaped area shall be covered by living plant material, such as sod, shrubs, ground cover, or trees. The landscape plan shall indicate the types, sizes, and quantities of plant material proposed for such area.

Figure 8
Parking Lot Landscaping

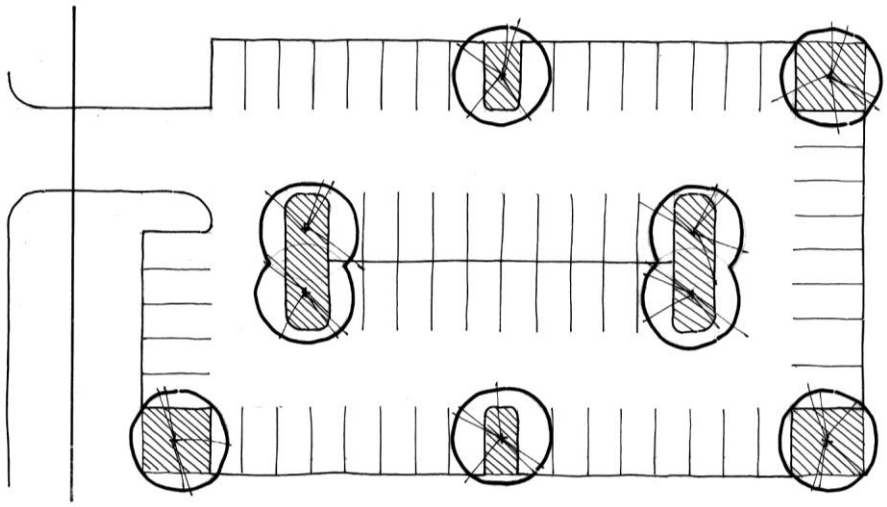

Parking Lot Requirements

- Internal landscaping:
  @ 20 s.f./space
- Plantings: 2400 s.f. provided
  @ 1 tree/300 s.f. = 8 trees

G. Landscaping of Rights-of-Way. Public rights-of-way located adjacent to required landscaped areas and greenbelts shall be planted with grass or other suitable live ground cover, and shall be maintained by the owner or occupant of the adjacent property as if the rights-of-way were part of the required landscaped areas or greenbelts. No plantings except grass or ground cover shall be permitted closer than three (3) feet from the edge of the road pavement.

H. Maintenance of Unobstructed Visibility For Drivers. No landscaping shall be established or maintained on any parcel or in any parking lot that will cause a traffic hazard by obstructing the view of drivers. All landscaping shall be planted in accordance with the requirements for intersection visibility under Section 8.2.

I. Potential Damage to Utilities. In no case shall landscaping material be planted in a way that will interfere with or cause damage to underground utility lines, public roads, or other public facilities. Species of trees whose roots are known to cause damage to public roadways, sewers, or other utilities, such as willows, silver maples, and the like, shall not be planted closer than fifteen (15) feet from any such roadways, sewers, or utilities.

J. Landscaping of Divider Medians. Where traffic on driveways, maneuvering lanes, private roads, or similar vehicle access-ways is separated by a

divider median, the median shall be curbed and have a minimum width of ten (10) feet. A minimum of one (1) deciduous or evergreen tree shall be planted for each thirty (30) lineal feet or portion thereof of median. Trees may be planted at uniform intervals, irregular intervals, or in groupings, but in no instance shall the center-to-center distance between trees exceed sixty (60) feet.

K. Fractional Requirements. When units or measurements determining quantities of required plantings result in requirement of a fraction of a plant, any fraction up to one-half may be disregarded, and fractions of one-half or greater shall require one (1) plant.

7.5 Standards for Landscape Materials. Unless otherwise specified, all landscape materials shall comply with the following standards:

A. Plant Quality. Plant materials used in compliance with the provisions of this Ordinance shall be nursery grown, free of pests and diseases, hardy in southeastern Michigan, in conformance with the American Standards for Nursery Stock of the American Landscape and Nursery Association (formerly the American Association of Nurserymen), and shall have passed inspections required under state regulations. Species native to Oakland County are recommended for all types of landscaping.

B. Non-Living Plant Material. Plastic and other non-living plant materials shall not be considered acceptable to meet the landscaping requirements of this Ordinance.

C. Plant Material Specifications. The following specifications shall apply to all plant material proposed in accordance with the landscaping requirements of this Ordinance:

1. Deciduous shade trees shall be a minimum of two and one-half (2.5) inches in caliper measured six (6) inches above grade with the first branch a minimum of four (4) feet above grade when planted.

2. Deciduous ornamental trees shall be a minimum of one and one-half (1-1/2) inches in caliper measured six (6) inches above grade with a minimum height of four (4) feet above grade when planted.

3. Evergreen trees shall be a minimum of six (6) feet in height when planted. Furthermore, evergreen trees shall have a minimum spread of two and one-half (2.5) feet, and the size of the burlapped root ball shall be at least ten (10) times the caliper measured six (6) inches above grade.

4. Shrubs shall be a minimum of two (2) feet in height when planted. Low growing shrubs shall have a minimum spread of twenty-four (24) inches when planted.

5. Hedges shall be planted and maintained so as to form a continuous, unbroken, visual screen within two (2) years after planting, barring unusual growing conditions, such as drought or disease. Hedges shall be a minimum of two (2) feet in height when planted.

Summary of Plant Material Specifications[1]

	Minimum Caliper	Minimum Height	Minimum Spread
Deciduous Trees	2 1/2 in.[2]	4 ft. first branch	--
Ornamental Trees	1 1/2 in.[2]	4 ft. first branch	--
Evergreen Trees	--	6 ft.	2 1/2 ft.
Shrubs	--	2 ft.	2 ft.
Hedges	--	2 ft.	--

[1] See Section 7.5 for detailed requirements.

[2] Measured six (6) inches above grade.

6. Ground cover used in lieu of turf grasses in whole or in part shall be planted in such a manner as to present a finished appearance and reasonably complete coverage after one (1) complete growing season.

7. Grass area shall be planted using species normally grown as permanent lawns in southeastern Michigan. Grass, sod, and seed shall be clean and free of weeds, pests, and diseases. Grass may be sodded, plugged, sprigged or seeded. When grass is to be established by a method other than complete sodding or seeding, nurse grass seed shall be sown for immediate effect and protection until complete coverage is otherwise achieved. Hydroseed, mulch blankets, or other acceptable means shall be used to protect newly seeded areas.

8. Mulch used around trees, shrubs, and vines shall be a minimum of three (3) inches deep, and installed in a manner as to present a finished appearance.

9. Prohibited Plant Species. Species that are either considered nuisances or are invasive exotic species that pose potentially harmful

effects on natural ecosystems**,** shall not be used to satisfy the landscaping requirements of this Article.

D. Native Plants in Landscaping. If native species are to be used in landscaping and plantings, the following standards shall be adhered to:

1. Native plant species chosen for a site should be based on the existing vegetation and site conditions. The woodland, wetland or meadow species that currently grow on a site typically indicate the native species to be used in landscaping the site.

2. Plantings installed in areas of stormwater conveyance, infiltration, or retention/detention should be planted with native species that specifically perform the necessary runoff attenuation, filtration, water uptake and purification functions needed in such areas. Both herbaceous and woody species should be incorporated into the plant mix, where the desired function dictates.

7.6 Installation and Maintenance. The following standards shall be observed where installation and maintenance of landscape materials are required:

A. Installation. Landscaping shall be installed in a sound, workmanlike manner to ensure the continued growth of healthy plant material. Areas to be landscaped shall be provided with a minimum topsoil depth of six (6) inches. Trees, shrubs, hedges, and vines shall be generously mulched at the time of planting.

B. Installation of Perimeter Landscaping. Landscaping along the perimeter shall be installed prior to construction, except where such landscaping would be destroyed during construction.

C. Seeding or Sodding. Lots or parcels shall be seeded or sodded within ninety (90) days after occupancy.

D. Protection from Vehicles. Landscaping shall be protected from vehicles through use of curbing in parking, loading and vehicular circulation areas. Landscape areas shall be elevated above the pavement to a height that is adequate to protect the plants from snow removal, salt, and other hazards.

E. Timing of installation.

1. Landscaping provided for nonresidential and multiple family residential projects shall be installed prior to issuance of a Certificate of Occupancy. Where phased projects are proposed, all landscaping associated with each phase shall be installed prior to issuance of a Certificate of Occupancy. However, if the development (or phase of a development) is being completed during the off-season when plants can not be installed, the Planning Commission or Zoning Of-

ficial shall have the ability establish an alternative schedule for the installation of required landscaping. If landscaping is to be installed after the Certificate of Occupancy is granted, the developer shall provide a performance guarantee to ensure installation of required landscaping in an amount equal the estimated value of the proposed landscape improvements.

2. Landscaping of all common areas associated with single-family residential developments shall be installed prior to the occupancy of the first lot or unit of the development, or of a particular phase in the case of a phased development. However, if the development is being completed during the off-season when plants can not be installed, the Planning Commission or Zoning Official shall have the ability establish an alternative schedule for the installation of required landscaping. If landscaping is to be installed after the Certificate of Occupancy is granted, the developer shall provide a performance guarantee to ensure installation of required landscaping, in an amount equal the estimated value of the proposed landscape improvements. Notwithstanding, required street trees shall be installed within 90 days of occupancy of each lot or unit, or by June 1 for residences occupied in winter months.

F. Maintenance. Landscaping required by this Ordinance shall be maintained in a healthy, neat, and orderly appearance, free from refuse and debris. All unhealthy and dead plant material shall be replaced immediately upon notice from the Zoning Official, unless the season is not appropriate for planting, in which case such plant material shall be replaced at the beginning of the next planting season.

All constructed or manufactured landscape elements, such as but not limited to benches, retaining walls, edging, and so forth, shall be maintained in good condition and neat appearance. Rotted, deteriorated, or damaged landscape elements shall be repaired, replaced, or removed.

G. Irrigation. All cultivated landscaped areas shall be irrigated with a permanent, automatic irrigation system designed to provide efficient irrigation coverage with minimal overspray onto non-landscaped areas. The Planning Commission shall have the authority to lessen or waive this requirement if it is demonstrated to their satisfaction that such irrigation is not necessary to maintain proposed landscaping in a healthy condition. Irrigation shall not be required for existing vegetation maintained in a natural state. The landscape plan shall indicate the nature, location, and specifications of the irrigation system which shall be used. The landscape plan shall have sufficient detail to show that adequate irrigation will be provided to all required landscape areas and plant materials.

7.7 Treatment of Existing Plant Material and Landscape Improvements.

A. Consideration of Existing Vegetation in the Landscape Design. In instances where healthy plant material exists on a site prior to its development, the Planning Commission may permit substitution of such plant material in place of the requirements set forth previously in this Article, provided such substitution is in keeping with the spirit and intent of this Article and the Ordinance in general.

B. Use of Existing Landscape Improvements. Existing hedges, berms, walls, or other landscape elements may be used to satisfy the requirements set forth previously, provided that such landscaping is in conformance with the requirements of this Section.

7.8 Modifications to Landscape Requirements. In consideration of the overall design and impact of a specific landscape plan, and in consideration of the amount of existing plant material to be retained on the site, the Planning Commission may modify the specific requirements outlined herein, provided that any such adjustment is in keeping with the intent of this Article and Ordinance in general. In determining whether a modification is appropriate, the Planning Commission shall consider whether the following conditions exist:

A. Topographic features or other unique features of the site create conditions such that strict application of the landscape regulations would result in a less effective screen than an alternative landscape design.

B. Parking, vehicular circulation, or land use are such that required landscaping would not enhance the site or result in the desired effect.

C. The public benefit intended by the landscape regulations could be better-achieved with a plan that varies from the strict requirements of the Ordinance.

7.9 Landscape Plan Submission Requirements. All development proposals for which landscaping is required pursuant to this Article shall submit a landscape plan demonstrating compliance with the standards herein. The required landscape plan shall include the following:

A. Location of all proposed plant material.

B. Schedule of all proposed plant materials, indicating the botanical and common name, number, size, and root type, as well as which landscaping or tree replacement requirement, if any, the plant material is intended to satisfy.

C. Calculations used for determining required number of trees and shrubs.

D. Proposed groundcover in all unpaved areas of the site.

E. Location of all existing trees exceeding 18 inches DBH on the site.

F. Proposed topographical contour lines.

G. Berm cross-sections, if proposed.

H. Planting details.

I. Irrigation details sufficient to demonstrate that adequate irrigation will be provided to all landscaped areas**.**

J. Details of any proposed structures, such as retaining walls, gazebos, arbors, fences, etc.

7.10 Fence and Wall Standards.

A. General Requirements. It shall be unlawful for any person, firm, or corporation to construct, or cause to be constructed, any fence on any property within the Charter Township of Oxford, including land zoned or used for single-family residential purposes, except in accordance with these regulations.

B. Location Of Fences and Walls.

1. All fences and walls shall be located entirely on the property of the owner of the fence. Adjoining property owners may jointly install a fence on the common property line.

2. No fence or wall shall be located within a public easement in which public utilities are located or are proposed to be located without first receiving the approval of the public utility responsible.

3. No fence or wall shall be established or maintained on any parcel that will cause a traffic hazard by obstructing the view of drivers. All fences and walls shall be installed in accordance with the requirements for intersection visibility under Section 8.2.

C. Height Regulations.

1. Fences and walls located on property zoned or used for residential purposes shall comply with the following regulations:

a. Fences and walls located in a required front setback adjoining a public or private road shall not exceed three (3) feet in height, with the exception of walls or fences that are associated with a decorative entrance feature of a multi-unit residential development, which may measure up to six (6) feet in height.

b. Fences and walls located in any required side setback not adjoining a street**,** or in any required rear setback**,** shall not exceed six (6) feet in height.

2. Fences and walls on property zoned or used for commercial or office purposes shall not exceed six (6) feet in height, unless waived by the Planning Commission. Fences in a required front setback shall not be permitted except where required by the Planning Commission.

3. Fences and walls on any industrial lot shall not exceed eight (8) feet in height.

4. Fences enclosing land used for agricultural purposes shall be exempt from the regulations of this subsection.

5. In determining the height of a fence or wall that separates two adjoining lots and that is located within two (2) feet of the common lot line, the maximum height at any point shall be measured from the highest grade at that point within two (2) feet on either side of the common lot line.

D. Safety.

1. No spikes, nails, barbed wire, or other pointed objects or sharp protrusions shall be placed on, attached to, or permitted to remain on, any fence or wall below the height of eight (8) feet, except in the case of fences that enclose farmland, in which case barbed wire may be permitted at any height of the fence.

2. Fences shall not contain any electric charge or current, except fences that enclose land used for agricultural purposes, in which case electrically charged fence wires shall be permitted, provided such wires shall be attached to the inside face of the fence posts. All electrically charged fences shall be of a type and make approved by Underwriters Laboratories.

3. Fences and walls may be constructed of woven wire, metal, wood, plastic, or masonry. Masonry walls shall require a foundation equal to the depth of the frost line, or forty-two (42) inches. Posts or anchoring devices for all other fences shall be placed at a depth of not less than thirty (30) inches.

E. Retaining Walls. A retaining wall shall be regulated as a fence if the wall projects more than eighteen (18) inches above the grade of the ground being retained.

F. Maintenance. Fences and walls shall be maintained so as to not endanger life or property, and so as to not collapse or present an imminent risk of collapse.

G. Exemptions. Fences and walls enclosing land used for agricultural purposes shall be exempt from the regulations and requirements of this Section. Likewise, fencing for municipal facilities shall also be exempt from fencing regulations.

H. Dumpster Enclosures. Dumpster enclosures shall be provided and screened in accordance with Section 6.20(A).

ARTICLE 8
ACCESS, CIRCULATION, PARKING AND LOADING

8.1 Required Road Frontage and Access.

A. Every use, building or structure established after the effective date of this Ordinance, shall be located on a lot or parcel which fronts upon, and is accessed by, a public road, or an approved private road which meets all requirements of Article 11. Such required frontage shall be provided for a distance equal to or greater than the minimum lot width required in that particular zoning district, as measured along the right of way line, except as follows:

1. Minimum road frontage for lots or parcels which abut, wholly or in part, a public or private road cul-de-sac or other curved portion of a public or private road, may be reduced to eighty five (85) percent of the required minimum lot width for the district in which the lot is located.

B. Common Driveways. Two (2) lots having contiguous road frontage may be accessed from that road via a common driveway. Should a common driveway be established, easement and maintenance agreements shall be required, meeting the minimum standards set forth in Section 11.5(A), (B) and (C), as well as Section 11.6, and shall be subject to Township review.

8.2 Visibility at Intersections. On any corner lot in any district, no fence, wall, screen, hedge, sign, or other structure or planting shall obstruct the visibility of vehicular traffic between the heights of three (3) feet and ten (10) feet in an area measuring twenty-five (25) feet from the point of intersection of the street right-of-way lines and the tangent connecting the twenty-five (25) foot extremities of the intersecting right-of-way lines.

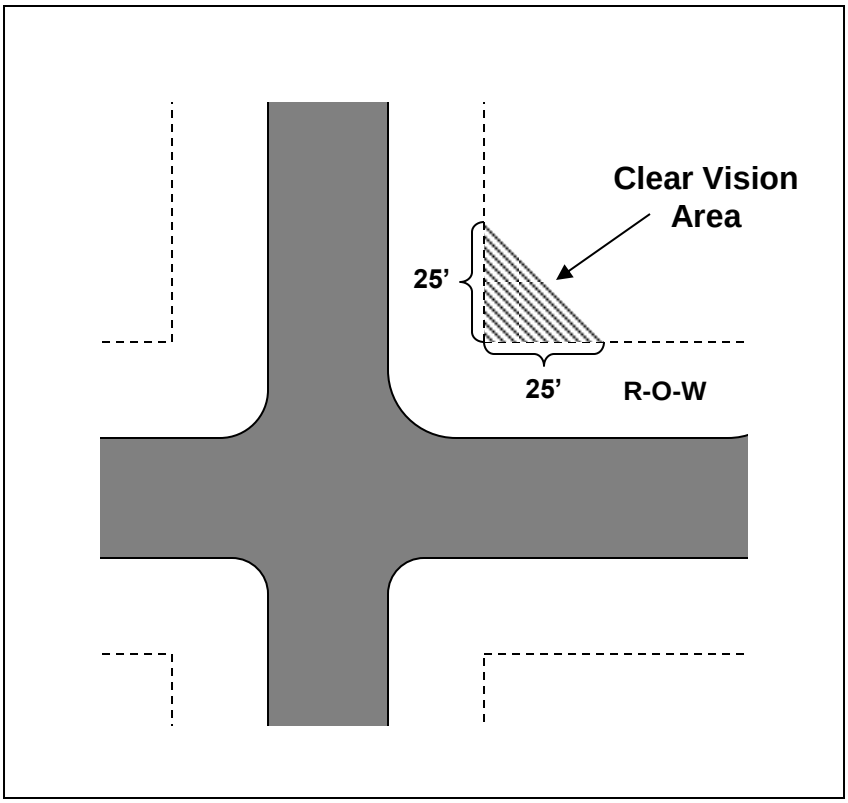

8.3 Access Management Standards.

A. Applicability. All development that is subject to site plan, site condominium, planned unit development, plat or private road review shall meet the requirements set forth in this Section. Access to public roads shall be controlled in the interest of public safety.

B. Access Barrier. Each building or group of buildings, parking and/or service areas, shall be physically separated from public roads by a curb, or other suitable barrier against unchanneled motor vehicle access or egress, except for driveway access authorized herein.

C. Driveway Access Standards. Driveways shall conform to the following performance standards or to standards adopted by the Road Commission for Oakland County, whichever is more stringent:

1. The design and placement of driveways must relate to internal circulation and parking areas such that the entrance can absorb the maximum rate of inbound traffic during a normal peak traffic period.

2. There must be sufficient on-site storage to accommodate at least three queued vehicles waiting to park or exit without using a portion

of the public right-of-way, obstructing existing vehicle sight distance, or otherwise interfering with street traffic.

3. Provisions for circulation between adjacent parcels are encouraged through coordinated or joint parking systems.

4. Driveways shall be designed to accommodate all vehicle types having occasion to enter and exit the site, including delivery vehicles. There shall be clear delineation and/or separation, where appropriate, of entry and exit lanes within driveways.

5. Loading and unloading activities shall not hinder vehicle ingress or egress.

6. Driveways placement must be such that an exiting vehicle has an unobstructed sight distance according to the minimum adopted by the Road Commission for Oakland County or MDOT, as applicable.

D. Driveway Spacing. Required spacing of driveways, whether within a single lot or on adjacent lots, shall be determined as provided herein. These standards shall not preclude access to a lot or parcel by a single driveway where such driveway would be otherwise permitted by the appropriate road agency.

1. Driveway spacing will be determined as a function of operating speeds of the adjacent public road. These spaces are based on average vehicle acceleration and deceleration rates and are considered necessary to maintain safe traffic operation. Spacing will be measured from the midpoint of each driveway. Spacing will be determined according to the following minimum standards or to standards adopted by the Road Commission for Oakland County or MDOT, as applicable, whichever is more stringent.

Speed Limit (mph)	Minimum Spacing (feet)
25	105
30	125
35	150
40	185
45	230
50	275

2. In the event that a particular parcel or parcels lack sufficient road frontage to maintain adequate spacing, the applicant shall have one of two options:

a. A waiver can be sought from the Planning Commission from the minimum spacing requirements provided herein, but in no case can the waiver be greater than the minimum re-

quired to provide safe access to a site while still meeting the intent of this Section. In determining whether such a waiver is acceptable, the Planning Commission shall consider the following criteria, in addition to the recommendation of the Township Engineer:

i Traffic volumes on adjacent roadways;

ii Intensity of use anticipated for proposed drives;

iii Availability of acceptable sight distances;

iv Distance from adjacent intersections;

v The presence of physical separation or barriers between existing and/or proposed driveways;

vi Input from the Road Commission or MDOT, as applicable; and,

vii The importance of the additional curb cuts to the function of the site.

b. The adjacent landowners may agree to establish a common driveway. Should a common driveway be established, easement and maintenance agreements shall be required, meeting the minimum standards set forth in Section 11.5(A), (B) and (C), as well as Section 11.6.

3. Number of Driveways per Parcel.

a. A maximum of one (1) two-way driveway opening or a pair of one (1) way driveway openings shall be permitted to a particular lot from each adjacent road.

b. Based on the recommendation of the County Road Commission and/or Township Engineer that an additional driveway is in the interests of safe traffic operation, the Planning Commission may permit one (1) additional driveway entrance along a continuous site with frontage in excess of three hundred (300) feet or two (2) additional driveway entrances along a continuous site with frontage in excess of six hundred (600) feet.

4. Driveway Approaches.

a. At a minimum, all uses or proposed uses which are subject to site plan review requirements shall provide paved drive-

way tapers to provide access to and from paved or gravel roadways.

b. Acceleration, deceleration, and passing lanes for driveway approaches entering on a public roadway may be required, as determined by the Township, based upon the following considerations:

i Traffic volumes, accident data, horizontal and vertical alignment, and sight distance conditions of the public roadway upon which a driveway is entering.

ii Other unique site conditions such as land use, topography, or other natural conditions.

iii Traffic generated by the proposed use.

c. Driveway tapers and acceleration, deceleration, and passing lanes shall be designed and constructed in accordance with the standards of the Road Commission for Oakland County for roadways under their jurisdiction and the Michigan Department of Transportation for roadways under their jurisdiction.

8.4 Traffic Impact Studies.

A. Intent. The Township requires traffic impact studies in certain cases to identify the anticipated traffic impacts and to assist in decision making. The intent of this section is to provide specific direction for the preparation of traffic impact studies where such studies are required by this Zoning Ordinance. The requirements of this section are also intended to help Township staff and officials determine the appropriateness of certain uses at proposed locations in terms of traffic impacts and the adequacy of proposed access design. Traffic impact studies may also be used by the applicant to justify additional access points, as outlined in Section 8.3(D)(2).

B. Applicability. A traffic impact study may be required by the Planning Commission for any use which, in the Township Engineer's preliminary analysis, is expected to potentially generate over one hundred (100) directional trips in any peak hour or over seven hundred fifty (750) directional trips in an average day, or for projects at locations that currently experience traffic operational problems.

C. Submittal Procedures. The traffic impact study shall be submitted with the site plan or other material required to be submitted.

D. Qualifications of Preparer. The person responsible for the preparation of the study shall have a degree or specific professional training in the prepa-

ration of traffic impact studies. The preparer shall have at least three (3) years of recent experience in the preparation of traffic impact studies, shall provide evidence of ongoing experience and familiarity with the Highway Capacity Manual and other traffic operation evaluation techniques, shall be an associate (or higher) member of one or more professional transportation-related organizations and shall be either a registered engineer (PE) or a planner with AICP or PCP certification. Any study involving roadway or traffic signal design work shall be prepared by or under the supervision of a registered engineer (PE) with specific training in traffic engineering.

E. Contents. The extent of information to be provided depends upon the expected trip generation of the proposed project. The information provided in the traffic impact study shall include:

1. A description of the site, surroundings and study area. Illustrations and a narrative should describe the characteristics of the site and adjacent roadway system (functional classification, lanes, speed limits, etc.). This description should include surrounding land uses, expected development in the vicinity which could influence future traffic conditions, special site features and a description of any committed roadway improvements. The study should define and justify the study area selected for analysis.

2. A description of the requested use which relates to traffic generation, such as the number and types of dwellings units, the gross and usable floor area, the number of employees and shift change factors. Intended phasing or future expansion should also be noted.

3. A description of existing peak-hour traffic volumes (and daily volumes if applicable) at intersections and on street(s) adjacent to the site. The existing level of service analysis shall be provided for intersections in the vicinity which are expected to experience an increase in traffic of at least five percent due to the proposed project. Existing traffic counts shall not be over two years old from the date of submittal of the report.

4. Roadway characteristics, described and illustrated, as appropriate. Features to be addressed include existing rights-of-way, lane configurations, geometrics, signal timing, traffic control devices, posted speed limits, average running speeds, sight distance information, existing driveways and potential turning movement conflicts in the vicinity of the site.

5. For projects that will be completed and occupied within one year of a traffic impact statement submittal, an analysis of background traffic (i.e. the expected increase in traffic volumes related to approved

projects and historic annual percentage increases).

6. Forecasted trip generation of the proposed use for the a.m. (if applicable), the p.m. peak hour and an average weekday. For commercial uses that are expected to generate significant weekend traffic, a weekend forecast shall also be required. The forecasts shall be based on one standard deviation above the average rate, outlined in the most recent edition of Trip Generation, published by the Institute of Transportation Engineers (ITE). For rezoning requests, the study shall contrast the traffic impacts of typical uses permitted in the requested zoning district with uses permitted in the current zoning district. The determination of typical uses shall be made by the Building Department or Planning Commission. Any trip reduction for pass-by trips, transit, ride-sharing, other modes, internal capture rates, etc., shall be based both on ITE findings and documented survey results acceptable to the agency reviewers. The community may accept in whole or in part the trip reduction rates used. For projects intended to be developed in phases, the trip generation by phase shall be described.

F. Distribution of Traffic. The projected traffic generated shall be distributed (inbound vs. outbound; left turn vs. right turn) onto the existing street network to project turning movements at site access points and nearby intersections where required. Projected peak hour turning movement volumes shall be illustrated in the report. A description of the application of standard engineering procedures for determining the distribution should also be attached.

G. Capacity Analysis. A before and after level of service or "capacity" analysis at the proposed access points and nearby intersections shall be completed using the procedures outlined in the most recent edition of the Highway Capacity Manual, published by the Transportation Research Board.

H. Mitigation Alternatives. The study shall outline mitigation measures and demonstrate any changes to the level of service achieved by these measures. Any alternatives or suggested phasing of improvements should be described. The mitigation measures may include items such as roadway widening, need for bypass lanes or deceleration tapers/lanes, changes to signalization, use of access management techniques or a reduction in the proposed intensity of use.

I. Waiver of Study Requirements. The requirement for a traffic impact study or the study elements listed herein may be waived or modified by the Planning Commission. Reasons for the waiver or modification shall be documented, and the following factors may be considered:

1. Roadway improvements are already scheduled which are expected to mitigate any impacts associated with the proposed project.

2. The existing level of service is not expected to be significantly impacted by the proposed project due to specific conditions at this location.

3. A similar traffic study was previously prepared for the site and is still considered applicable.

8.5 General Off-Street Parking Requirements. In all zoning districts, off-street parking facilities for the storage and parking of self-propelled motor vehicles for the use of occupants, employees, and patrons of the buildings hereafter erected, altered, or extended after the effective date of this Ordinance, shall be provided as herein prescribed. Such space shall be maintained in a safe, passable condition, and shall not be encroached upon so long as said main building or structure remains, unless an equivalent number of such spaces are provided elsewhere in conformance with this Ordinance.

A. Location of Parking for One- and Two-Family Dwellings. The off-street parking facilities required for one- and two-family dwellings shall be located on the same lot as the building they are intended to serve, but shall not be considered a parking lot under the provisions of Section 8.7 of this Article.

B. Location of Parking for Multiple-Family Residential. The off-street parking facilities for multiple-family dwellings shall be located on the same lot as the dwellings they are intended to serve, and shall consist of a parking lot as set forth in Section 8.7. In no event shall any uncovered parking space be located nearer than ten (10) feet to any main building.

C. Location of Parking for Other Land Uses. The off-street parking facilities required for all other uses shall be located on the lot or within five hundred (500) feet of the permitted uses requiring such off-street parking, such distance to be measured along lines of public access to the property between the nearest point of the parking facility to the building to be served. A fully executed parking easement agreement for all off-site parking shall be signed by all parties involved and recorded with the Oakland County Register of Deeds for all off-street parking intended to service the main facility. Such parking easement agreement shall be subject to Township review and approval.

D. Seating Capacity of Seats. As used in this Article to determine parking requirements, seats shall mean that each twenty-four (24) inches of seating facilities shall be counted as one (1) seat, except that where specifications and plans filed with the Zoning Administrator specify a certain seat-

ing capacity for a particular building, such specified seating capacity shall be used as the basis for determining required parking spaces.

E. Similar Uses and Requirements. In the case of a use not specifically mentioned, and which is similar to another use listed, the requirements for off-street parking facilities for the similar use shall apply.

F. Floor Area. For the purpose of this Article, the floor area used to determine the required number of parking spaces shall be as defined in Section 2.2.

G. Fractional Requirements. When units or measurements determining number of required parking spaces result in requirement of a fractional space, any fraction up to, and including one-half may be disregarded and fractions over one-half shall require one (1) parking space.

H. Existing Off-Street Parking at Effective Date of Ordinance. Off-street parking existing at the effective date of this Ordinance which serves an existing building or use, shall not be modified in quantity, arrangement or construction to other than that required under the terms of this Ordinance.

I. Collective Provisions. Nothing in this Section shall be construed to prevent collective provisions of off-street parking facilities for two or more buildings or uses, subject to the Planning Commission's finding that such an arrangement is practical and satisfactory to each of the uses intended to be served, and when all requirements for location, design, and construction are met.

1. Computing Collective Parking Requirements. In computing requirements for any collective parking arrangement, the total space requirement is the sum of the individual requirements that will occur at the same time. If parking requirements for individual uses occur at distinctly different times, the total of such off-street parking facilities required for collective use may be reduced below the sum total of the individual parking requirements.

2. Record of Agreement. A copy of the agreement between the joint users of the collective parking shall be recorded with the Oakland County Register of Deeds. The agreement shall include a guarantee for continued use of the parking facility by each party. Such collective parking agreement shall be subject to Township review and approval.

J. Parking Duration. Except when land is used as storage space in connection with the business of a repair or service garage, a twenty-four (24) hour time limit for parking in non-residential off-street parking areas shall prevail, it being the purpose and intention of the foregoing that the requirement of maintaining vehicle storage or parking space is to provide for

the public safety in keeping parked cars off the streets. Such requirement is not designed to or intended to provide, and shall not permit, the storage or prolonged parking of wrecked or junked cars on any such parking area in any such district, or for creating a junk yard or a nuisance in such areas.

K. Restriction of Parking on Private Property. It shall be unlawful for any person, firm, or corporation to park any motor vehicle on any private property, or use said private property for vehicle storage, or use any portion of any private property as a parking space, without the express or implied consent, authorization, or ratification of the owner, holder, occupant, lessee, agent, or trustee of such property. Complaint for the violation of this Section shall be made by the owner, holder, occupant, lessee, agent, or trustee of such property.

L. Flexibility in Application. The Township recognizes that, due to the specific requirements of any given development, inflexible application of the parking standards set forth in Section 8.6 may result in development with inadequate or excessive amounts of parking in relation to that which is needed. The former situation may lead to traffic congestion or unauthorized parking on adjacent streets or neighboring sites. The latter situation may result in excess paving and stormwater runoff and the inefficient use of land which could otherwise be left as open space.

1. The Planning Commission may permit deviations from the requirements of Section 8.6 and may require more or allow less parking whenever it finds that such deviations are more likely to provide a sufficient number of parking spaces to accommodate the specific characteristics of the use in question. In making such a determination, the Planning Commission shall consider the following criteria:

    a. The anticipated number of employees, customers, residents or other users of the facility at any one time;

    b. Demonstration of need by petitioner based on comparable uses at similar locations;

    c. Proximity to existing parking areas where shared or collective parking agreements are possible; and,

    d. Availability of non-motorized, transit, or other alternatives to vehicular transportation.

2. The Planning Commission may attach conditions to the approval of a deviation from the requirements of Section 8.6 that bind such approval to the specific use in question. Where a deviation results in a reduction in parking, the Planning Commission may further impose conditions which ensure that adequate reserve area is set aside for future parking, if needed. Where an area is set aside for

reserve parking, it shall be easily developed, not devoted to a use other than open space, and shall be designed to accommodate attendant facilities such as maneuver lanes and drainage.

M. Electric Vehicle Charging Stations. Parking spaces dedicated for electric vehicle charging stations can be counted toward meeting the requirement of off-street parking. These stations shall be signed and reserved for electric vehicle charging only. The stations shall comply with State of Michigan Electrical Code. Where allowed by the Road Commission for Oakland County, on-street electric vehicle charging stations shall also be permitted.

8.6 Off-Street Parking Requirements by Use. The amount of required off-street parking space for new uses or buildings, additions thereto, and additions to existing buildings as specified above shall be determined in accordance with the following table, no more or less parking may be approved except under the flexibility provisions found in Section 8.5(L). The space so required shall be stated in the application for a building and land use permit and shall be irrevocably reserved for such use and/or shall comply with the initial part of this Section.

		Use	Required No. of Spaces	Per Each Unit of Measure as Follows:
A.	Residential Parking Requirements.			
	1.	Single- or Two-Family Dwelling	2	Per each dwelling unit
	2.	Multiple-Family Dwelling	2 1	Per each dwelling, plus Per each ten (10) dwelling units
	3.	Senior Citizen Housing	0.5 1	Per each dwelling unit, plus Per each ten (10) dwellings units
B.	Institutional Parking Requirements.			
	1.	Churches and Places of Worship	1	Per each four (4) seats based on maximum seating capacity in the main place of assembly therein
	2.	Private Clubs & Lodges	1	Per each four (4) individual members allowed within the maximum occupancy load as established by local county, state, fire, health, or building codes

3.	Hospitals	1 1 1	Per each two (2) beds, plus Per staff doctor, plus Per each two (2) employees
4.	Convalescent Homes, Homes for the Aged, Nursing Homes, Children's' Homes	1 1 1	Per each four (4) beds, plus Per each staff doctor, plus Per each two (2) employees
5.	High Schools	1 1 1	Per each teacher, plus Per each ten (10) students, plus Per each employee or administrator. Or Requirements of the auditorium or assembly hall therein (whichever is greater)
6.	Elementary & Junior High Schools, Trade Schools	1 1	Per each teacher, plus Per each employee or administrator, or Requirements of the auditorium or assembly hall therein (whichever is greater)
7.	Child Care Center, Day Nurseries, or Nursery Schools	1 1	Per each five (5) students, plus Per each employee
8.	Stadiums & Sports Arenas	1	Per each four (4) seats or eight (8) ft of bench

C. Commercial Parking Requirements.

1.	Retail Stores, including Pharmacies, Convenience Stores, Video Rental Establishments, Discount Stores and other similar uses, except as otherwise specified herein	1	Per each 200 sq ft of GFA
2.	Furniture, Appliances, & Household Equipment, Repair Shops, Hardware Stores and other similar uses	1 1	Per each 800 sq ft of UFA Per each two (2) employees
3.	Auto Salesroom, Wholesale Stores, Machinery Sales, & other similar uses	1 1	Per each 1000 sq ft of UFA, plus Per each employee

4.	Medical Clinic & Dental Offices	1	Per each 250 sq ft of GFA
5.	Business & Professional Offices	1	Per each 350 sq ft of GFA
6.	Motels, Hotels, Tourist Homes	1 1	Per each guest bedroom, plus Per employee, plus amount required for accessory uses
7.	Banks, Post Offices	1 1	Per each 200 sq ft of UFA, plus Per each one (1) employee plus Required stacking spaces
8.	Barber & Beauty Shops	2	Per each operator
9.	Bed and Breakfast Establishment	1 3	Per each B & B bedroom, plus Required for owner's use
10.	Bowling Alleys	5	Per bowling lane, plus Amount required for accessory uses
11.	Dance halls, pool or billiard parlors, roller or skating rinks, exhibition halls and assembly halls without fixed seats	1	Per each two (2) persons allowed within the load established by the Building Code
12.	Drive-in Restaurants	1 1	Per each 50 sq ft of GFA, plus Per each two (2) employees, with a minimum total of 25 parking spaces
13.	Drive-Thru Restaurants	1 1	Per each 200 sq ft of GFA, plus Per each two (2) employees, with a minimum total of 25 parking spaces
14.	Establishments (other than drive-in or drive-thru restaurants) in which the sale and consumption of food, beverages and/or refreshments occurs on the premises	1 1 1 1	Per each four (4) persons allowed within the maximum occupancy load as established by local, state, or county fire, health, or building codes, plus Per each three (3) employees, or Per each 100 sq ft of UFA, plus Per each three (3) employees (whichever is greater)

15.	Funeral Homes, Motuaries	1 1	Per each 50 sq. ft. of service parlors, chapels, and reception areas, plus Per each funeral vehicle stored on the premises
16.	Private Tennis, Swim or Golf Clubs, or other similar uses	1	Per each two (2) member families or individuals, plus Amount required for accessory uses
17.	Private Clubs and Lodges	1	Per each two (2) persons allowed within the maximum occupancy load as established by local, county or state fire, building or health codes or 15 spaces per 1,000 square feet of usable floor area, whichever is greater
18.	Golf Course, open to the general public	3 1	Per each hole, plus Per each employee, plus Amount required for accessory uses
19.	Driving Range	1	Per two (2) tees
20.	Filling Stations, Automobile Service Stations	2 1 1 1	Per each service stall, plus Per each employee, plus Per each service vehicle; plus Per each fuel pump
21.	Motor Vehicle Wash Establishments (self-serve)	2 1	Per each wash stall; plus Per each vacuum station
22.	Motor Vehicle Wash Establishments (other than self-serve)	2 1 1	Per each unit which represents the establishments maximum capacity as computed by dividing the linear dimensions of the mechanical wash/dry operation by 20 ft, plus Per each vacuum station Per each employee plus that required for convenience stores, as applicable.
23.	Service Garages, Auto Repair Shops, Collision or Bump Shops, and other similar uses	2 1	Per each service stall, plus Per each two (2) employees computed on the basis of the maximum number of employees on duty at any one time

24.	Open Air Business (not otherwise provide for herein)	1	Per each 800 sq ft of lot area used for said business
25.	Personal Service Establishments (not otherwise provided for herein)	1	Per each 300 sq ft of UFA, plus
		1	Per each two (2) employees
26.	Theaters, Auditoriums, and Assembly Halls	2	Per each four (4) seats based on the maximum seating capacity in the main place of assembly therein, plus
		1	Per each two (2) employees
27.	Video Arcades	1	Per each 50 sq. ft. of UFA, with a minimum of 6 spaces
28.	Video Rental Facilities	1	Per each 200 sq. ft. of UFA, with a minimum of 6 total spaces
29.	Commercial outdoor recreation centers not specified elsewhere.		To be determined by the Planning Commission in consideration of the expected types of activities, number of participants, spectators, accessory uses and occupants per vehicle
30.	Medical clinics including outpatient care centers, emergency care, 24 hour medical stations, etc.	2	Per each exam or outpatient procedure/operating room, plus
		1	Per each laboratory or recovery room, plus
		1	Per each two (2) rooms for employee parking

D. Industrial Parking Requirements.

1.	Industrial or Manufacturing Establishments, Research Establishments	1	Per each 1-1/2 employees computed on the basis of the greatest number of persons employed at any one time, or Per each 800 sq ft of UFA (whichever is greater)
2.	Warehouses and Storage Buildings	1	Per each two (2) employees computed on the basis of the greatest number of persons employed at any one time, or
		1	Per each 2,000 sq ft of GFA (whichever is greater)
3.	Contractors Office	1	Per each employee, plus
		1	Per vehicle stored on-site, or
		1	Per 300 sp ft of GFA

4.	Auto Wrecking and Junk Yards	1 1 1	Per each employee, plus Per each operating vehicles stored on-site, plus Per each acre of land in the yard

8.7 Off-Street Parking Lot Construction and Operation. The construction of any parking lot shall be in accordance with the provisions of this Ordinance and such construction shall be completed and approved by the Zoning Administrator and the Township Engineer prior to use of the property as a parking lot and before a Certificate of Occupancy is issued. Plans for the development of any parking lot must be prepared, submitted, reviewed and approved in accordance with the standards of Article 12, Site Plan Review.

A. Paving and Drainage. All such parking lots, driveways, or loading areas required for uses other than single- or two-family residential shall be paved with either asphalt or concrete, shall be graded and drained so as to dispose of surface water which might accumulate within or upon such area, and shall be completely constructed prior to a Certificate of Occupancy being issued. No surface water from such parking lot area shall be permitted to drain onto adjoining private property or regulated wetlands without first flowing into a sedimentation management facility. Under certain conditions, the Planning Commission shall have the discretion of waiving certain hard surface paving requirements if the following conditions prevail:

1. Where driveways, loading, turn-around, or storage areas receive only limited use and are not used for employee parking, customer parking, or primary access.

2. Where gravel surfacing and potential problems arising from dust or scattered gravel will not impact neighboring properties.

3. Where hard surfacing will significantly increase storm water runoff and create a potential for flooding and/or soil erosion.

B. Illumination. All illumination associated with such parking lots shall be designed, installed and maintained in accordance with Section 10.2.

C. Setbacks, Landscaping, and Screening.

1. Parking shall not be permitted in the required front yard setback.

2. Parking shall not encroach upon perimeter greenbelts required pursuant to Section 7.3, unless such requirements have been modified by the Planning Commission.

3. Parking areas that adjoin a residential use or district shall be screened in accordance with Section 7.4(E), or provided with a masonry screen wall of no less than five (5) in height.

4. Parking areas shall be provided with internal landscaping in accordance with Section 7.4(F).

D. Dimensional Requirements. Adequate ingress and egress to the parking lot, by means of limited and clearly defined drives, shall be provided for all vehicles. Plans for the layout of off-street parking facilities shall be in accordance with the following minimum regulations.

Parking Pattern	Maneuvering Lane Width		Parking Space Width	Parking Space Length
	One-Way	Two-Way		
0° (parallel)	12 ft	20 ft	9 ft	20 ft
30° to 53°	12 ft	20 ft	9 ft	20 ft
54° to 74°	15 ft	24 ft	9 ft	20 ft
75° to 90°	15 ft	24 ft	10 in	20 ft

The Planning Commission, in their discretion, may allow the required parking space length to be reduced by up to two (2) feet where vehicles are able to overhang curbs or wheel blocks without impacting adjacent landscaped areas or reducing adjacent sidewalks to a width of less than five (5) feet.

E. Curbing shall be provided to prevent any vehicle from projecting over the lot or setback lines, provide separation between vehicular and pedestrian circulation, and to protect adjacent buildings and landscaped areas. At minimum, curbing shall be provided around the perimeter of the parking lot and around all internal islands.

F. Backing onto a public or private roadway from an off-street parking space shall be prohibited.

G. Truck Parking. Off-street parking facilities for trucks at restaurants, service stations, and similar establishments, shall be of sufficient size to adequately serve trucks and not interfere with other vehicles that use the same facilities. Such truck space shall not be less than ten (10) feet in width and fifty-five (55) feet in length.

H. Off-Street Stacking Space for Drive-Through Facilities. All businesses, which provide drive-through facilities for serving customers within their automobile, shall provide adequate off-street stacking space and lanes, which meets the following requirements:

1. Each stacking space shall be computed on the basis of ten (10) feet in width and twenty (20) in length. Each stacking lane shall be a minimum of twelve (12) feet in width.

2. Clear identification and delineation between the drive-through facility and parking lot shall be provided. Drive-through facilities shall be designated in a manner, which promotes pedestrian and vehicular safety.

3. For all drive-through facilities which have a single stacking lane, an escape lane shall be provided which allows other vehicles to pass those waiting to be serviced.

4. The number of stacking spaces per service lane shall be provided for according to the following table, however the Planning Commission may permit deviations from the requirements of this Section and may require more or allow fewer stacking spaces whenever it finds that such deviations are more likely to provide a sufficient number of stacking spaces to accommodate the specific characteristics of the use in question.

5. When a use is not specifically mentioned, the requirements for off-street stacking space for the most similar use shall apply.

Use	**Minimum Stacking Spaces Per Service Lane**
Banks	4
Photo Service	4
Pharmacies	3
Dry-Cleaning	4
Quick Lube	4
Fast-Food Restaurants	6
Car Washes (Self Service)	
Entry	3
Exit	1
Car Washes (Automatic)	
Entry	6
Exit	2

6. Barrier-Free Parking Facilities. Barrier-free parking spaces shall be provided in accordance with the Michigan Building Code and ICC-ANSI A117.1.

8.8 Parking and Storage of Commercial and Recreational Vehicles.

A. Parking and Storage of Commercial Vehicles and Equipment.

1. Commercial vehicles and equipment shall include, but shall not be limited to, tractors (excluding lawn tractors), bulldozers, earth carriers, drag lines, cranes, back hoes, dump trucks, stake trucks, flatbed trucks, panel trucks, cube vans, wreckers, septic tank pumpers, semi-tractors, tanker trucks, well-drilling rigs, welding trucks, semi-trailers, buses, and any other type of commercial or construction equipment, as well as any other motor vehicles not customarily used for passenger transport and/or having a payload of three (3) tons or greater.

2. The open storage or outdoor parking of commercial vehicles or equipment in residentially zoned or used areas of the Township shall be prohibited, with the following exceptions:

a. The open storage and outdoor parking of panel trucks, cube vans and/or enclosed trailers is permitted provided that they have no more than two (2) axles (one steering, one drive), and do not exceed twenty-eight (28) feet in length. All such vehicles shall adhere to the standards set forth in Section 8.8(B)(2) for recreational vehicles.

b. For the purposes of this Section, motor vehicles customarily used for passenger transport (i.e. sedans, coupes, hatchbacks, station wagons, minivans, vans, pick-up trucks, sport utility vehicles, etc.) shall not be considered commercial vehicles, even when used for a commercial purpose.

c. The open storage or outdoor parking of commercial vehicles and/or equipment shall be allowed in any zoning district where such parking or storage is limited to vehicles or equipment engaged in the performance of a service on the adjacent or underlying property, for the period of time reasonably necessary to complete the service. Utility service vehicles, emergency service vehicles and vehicles engaged in agricultural activities are also exempt from these provisions.

B. Parking and Storage of Recreational Vehicles on Residentially Zoned or Used Property

1. Recreational vehicles shall include, but shall not be limited to, campers, motor homes, travel trailers, boats, jet skis and other personal watercraft, snowmobiles, all-terrain vehicles (ATVs) and associated trailers.

2. The outdoor parking or open storage of recreational vehicles shall be allowed on residentially zoned or used property, subject to the following provisions:

   a. Such parking shall be prohibited within any public road right-of-way or private road easement.

   b. In no case shall a recreational vehicle be parked less than five (5) feet from the principal building on a residential lot or parcel.

   c. Recreational vehicles parked consistently on a residential lot or parcel for longer than fourteen (14) days shall comply with Section 8.8(B)(3), below.

3. The storage of recreational vehicles consistently for lengths exceeding fourteen (14) days shall be allowed on residentially zoned or used property, subject to the following provisions:

   a. The recreational vehicle(s) being stored shall be owned by the owner or lessee of the residential property.

   b. Such storage shall be prohibited within the a required front yard setback as well as any public road right-of-way or private road easement.

   c. In no case shall a recreational vehicle be stored less than five (5) feet from the principal building on a residential lot or parcel.

   d. Recreational vehicles parked or stored on a residential lot or parcel shall not be used for living, sleeping or housekeeping purposes.

4. The repair, refurbishing or reconstruction of licensed and operable recreational vehicles on residential property shall be subject to the following:

   a. Recreational vehicles being worked on shall be on an improved driveway surface.

   b. Procedures exceeding forty-eight (48) hours in duration or which require the vehicle to be inoperable in excess of forty-eight (48) hours shall be conducted within an enclosed building.

   c. Inoperable and/or unlicensed vehicles and vehicle parts shall be stored inside an enclosed building.

8.9 Off-Street Loading Requirements. On the same premises with every building or part thereof, erected, and occupied for manufacturing, storage, warehouse, goods display, department store, wholesale, market, hotel, hospital, laundry, dry cleaning or other uses similarly involving the receipt or distribution of vehicles, material or merchandise, there shall be provided and maintained on the lot adequate space for standing, loading and unloading services in order to avoid undue interference with street or parking areas.

A. Such loading and unloading space, unless completely and adequately provided for within a building, shall be an area ten (10) feet by fifty (50) feet, with fourteen (14) foot height clearance, and shall be provided according to the following schedule.

Gross Floor Area (sq. ft.)	Loading & Unloading Spaces Required in Terms of Square Footage of Gross Floor Area
0 - 2,000	None
2,000 - 20,000	One (1) space
20,000 - 100,000	One (1) space plus one (1) space for each 20,000 sq ft in excess of 20,000 sq ft
100,000 - 500,000	Five (5) spaces plus one (1) space for each 40,000 sq ft in excess of 100,000 sq ft
over 500,000	Fifteen (15) spaces plus one (1) space for each 80,000 sq ft in excess of 500,000 sq ft

B. Double Count. Off-street loading space areas shall not be construed as, or counted toward, the supply of required as off-street parking space area.

C. Backing into a site from a public or private road right-of-way shall be prohibited.

8.10 Safety Paths. All developers of property subject to the requirements of the Township's Safety Path and Sidewalk Regulations Ordinance No. 117, shall comply with all provisions of said Ordinance.

ARTICLE 9
SIGNAGE

9.1 Contents. For ease of use, the sub-sections of this chapter are outlined below:

9.1 Contents
9.2 Purpose
9.3 Definitions
9.4 Signs Prohibited in All Districts
9.5 Signs Allowed without a Permit
9.6 Schedule of Sign Regulations
9.7 Signs in Residential Districts
9.8 Signs in Non-Residential Districts
9.9 Billboards
9.10 Temporary Signs
9.11 Sign Design Standards
9.12 Sign Permit Review Process
9.13 Inspection and Maintenance
9.14 Non-Conforming Signs
9.15 Removal of Prohibited Signs in Public Places
9.16 Removal of Unauthorized Signs in Public Rights-of-Way
9.17 Appeals

9.2 Purpose. The purposes of this section shall be to preserve the residential character and rural atmosphere of the community; to prevent the marring of the appearance of the Township by an excessive number of signs; to provide for the safety of drivers and pedestrians by controlling distractions and impairments to visibility; to render the area attractive to travelers; to protect residents from annoyances; and to protect the public health, safety, welfare, and property values by: establishing standards for the design, size and location of signs; establishing permit review and approval procedures for signs; regulating the construction and maintenance of signs; and providing for the removal of any unauthorized signs placed within road rights-of-way or on public property. All signs within the Township shall conform to the provisions of this section, and shall not, by reason of their size, location, construction, or manner of display, endanger life and limb, confuse or mislead traffic, obstruct vision necessary for vehicular and pedestrian traffic safety, or otherwise endanger public welfare.

9.3 Definitions. The following terms, phrases, words and their derivatives shall have the meaning given in Section 2.2 of this Ordinance, unless the context other otherwise requires:

Animated Sign	Awning Sign	Balloon Sign
Banner Sign	Billboard	Business Sign
Canopy Sign	Changeable Copy Sign	Commercial Message
Construction Sign	Development Entranceway Sign	Flag
Flashing Sign	Freestanding or Ground Sign	Illuminated Sign
Incidental Sign	Integral Sign	Marquee
Marquee Sign	Monolith Sign	Neon Sign
Non-Conforming Sign	Obsolete Sign	Off-Premises Sign
Pennant Sign	Political Sign	Portable Sign
Principal Building	Projecting Sign	Real Estate Sign
Roof Sign	Sandwich Sign	Sign
Street Furniture Sign	Street Frontage	Suspended Sign
Temporary Sign	Wall Sign	Window Sign

9.4 Signs Prohibited in All Districts. Unless otherwise permitted by this Ordinance, by variance or by legal non-conforming status as provided in this Ordinance, the following signs shall not be permitted:

A. Signs which imitate, or may be confused with or construed as, an official traffic sign, signal or device, or which contain the words “stop,” “go,” “yield,” “slow,” “caution,” “danger,” “warning,” or similar words.

B. Signs which are located or placed on any property or building or illuminated in a manner that interferes with motorists’ proper visibility of pedestrians, traffic or traffic signs, signals or devices.

C. Signs that are located in, project into, or overhang any public right-of-way or dedicated public easement, except as allowed by the Township, County, State or Federal government.

D. Any sign or sign structure which, in terms of applicable building or electrical codes, is structurally or electrically unsafe, or which blocks a fire escape or a door, window or other opening that could be used for fire escape.

E. All portable or non-structural signs except those used for Township- or Village-sponsored events when posted three (3) days or less or as allowed under other sections of this Ordinance. For purposes of this Ordinance, a sign shall be considered non-structural if it has no

permanently mounted, self-supporting structure or is not an integral part of a building to which it is accessory.

F. Any sign which has any visible moving parts, visible revolving parts, visible mechanical movement of any description, or other apparent visible movement achieved by electrical, electronic, or mechanical means, including intermittent electrical pulsations, or by action of normal wind current, except for flags and time, temperature and stock market signs as provided in this Ordinance, but including animated signs.

G. Exterior banners, pennants, strings of flags, spinners and streamers. Temporary banners for Oxford Township or Oxford Village-sponsored events are exempt from this requirement when posted forty-five (45) days or less.

H. String of lights used for commercial purposes, other than seasonal or holiday decorations.

I. Flashing signs with moving or blinking lights, or signs with exposed incandescent light bulbs.

J. A rotating search light or similar device which emits beams of light.

K. Signs which incorporate any open spark or flame unless specifically approved by the Building Department.

L. Roof signs or any sign which projects more than one foot above the roof line.

M. Pylon or pole-mounted signs. In instances where the applicant demonstrates to the satisfaction of the Planning Commission or Zoning Official, as applicable, that visibility would be seriously impacted by a ground or monument sign, a pylon sign may be permitted. Visibility is related only to ingress/egress of pedestrians and vehicles - not visibility of buildings or advertisements

N. Backlit awnings, especially those made of translucent fabric or material.

O. Any sign greater than six (6) square feet displayed on an automobile, truck, or other motorized vehicle, parked in view of a public road right-of-way or private road easement for greater than three (3) consecutive days.

P. Street furniture signs with the exception of signage on table umbrellas used for outdoor cafe-style dining.

Q. Signs which are attached to utility poles, trees, fences, rocks or in an unauthorized manner to walls or other signs.

R. Signs on public or private towers. Any type of signage including logos shall not be permitted on a public or private radio, television, cellular phone, or water towers with the exception of the name of the municipality.

S. Off-premises signs, except as provided for billboards under Section 9.9, temporary signs advertising a house for sale, lease, or rent under Section 9.10(l), and way-finding signs under Section 9.5(X).

T. Obsolete signs which advertise an activity, business product, or service no longer produced or conducted on the premises upon which the sign is located. Where the owner or lessor of the premises is seeking a new tenant, such signs may remain in place for not more than ninety (90) days from the date of vacancy.

U. Signs erected on either public or private property without the consent of the owner or occupant thereof.

V. Any sign unlawfully installed, erected, or maintained.

W. Signs advertising activities which are illegal under federal, state or Township laws or regulations.

9.5 Signs Allowed without a Permit. The following signs are allowed to be erected or maintained without a permit, provided they comply with the following regulations and all applicable ordinances, laws, and regulations, including the construction standards of this section.

A. Address Signs. A sign having an area of not more than two (2) square feet, to convey only the street number and address.

B. Business Affiliation Signs. Signs not exceeding a total of two (2) square feet per business indicating acceptance of credit cards or describing business affiliations and are attached to a permitted sign, exterior wall, building entrance or window.

C. Directional Signs. Signs located immediately adjacent to each exit, entrance or change in direction of vehicular or pedestrian travel that are installed to provide for the safe flow of persons and/or vehicles.

D. Flags. Insignia of any nation, state, government, community organization, corporation, college or university, respectfully displayed, provided that no more than five (5) flags representing the same entity exist on a property, and further that no flag be located in or fly over a public right-of-way.

E. Garage Sale Signs. Signs for garage sales, yard sales, basement sales, rummage sales, moving sales, estate sales or other similar sales, when conducted at a residence: may be erected on private property only; are limited to two (2) signs per sale location; may not exceed six (6) square

feet or four (4) feet in height per sign; may not be erected for more than six (6) days in any calendar year per sale location; and may not occupy a public right-of-way.

F. Gas Station Pump Island Signs. Signs located immediately adjacent to gas pumps which provide identification to "self-serve" and "full-serve" operations, provided that there are no more than two (2) such signs per pump island and that such signs do not exceed four (4) square feet in area.

G. Historical Marker. Plaques or signs describing state or national designation as an historic site or structure and/or containing narrative, not exceeding twelve (12) square feet in area.

H. Incidental Signs. Signs bearing non-commercial messages that have a purpose secondary to the use of the lot on which they are located, such as those designating the location of public telephones, restrooms, restrictions on smoking and restrictions on building entrances, provided that no such signs exceed two (2) square feet in area.

I. Integral Signs. Signs that display the name of the building, date of erection, or take the form of a monumental citation or commemorative tablet, when carved into stone, concrete or similar material or made of bronze, aluminum or other non combustible material and made an integral part of the structure and not exceeding six (6) square feet in area.

J. Menu Board. Subject to Planning Commission approval, note to exceed one (1) sign per lane, each sign no greater than twenty-four (24) square feet in area and six (6) feet in height which display menu items and contain a communication system for placing food orders at an approved drive through restaurant, provided such sign(s) is not in the front yard.

K. Miscellaneous Signs. On vending machines, gas pumps, and ice containers indicating the contents or announcing on-premise sales, provided that the sign on each device does not exceed two (2) square feet in area.

L. Model Signs. Temporary signs directing the public to a model home or unit, which do not exceed six (6) square feet in area.

M. Open House Signs. Portable real estate "open house" signs with an area not greater than six (6) square feet and a maximum height of five (5) feet, provided only one such sign may be located on the premises being sold. Such signs may not be erected for more than eight (8) consecutive days and may not occupy a public right-of-way.

N. Owner/Tenant Signs. Address or occupant name and other signs of up to two (2) square feet in area mounted on the wall of a commercial building.

O. Parking Lot Signs. Signs indicating restrictions on parking, when placed within a permitted parking lot, which do not exceed six (6) feet in height and four (4) square feet in area.

P. Political Signs. Signs for the purposes of general expression (limited to one per residence) and temporary political signs advocating or opposing candidates for public office or a position on an issue to be decided at an election. Such signs shall not exceed ten (10) square feet in area and four (4) feet in height. Temporary political signs shall be removed within 10 days after the election.

Q. Public Notice Signs. Temporary signs announcing any public, charitable, educational, religious or other non commercial event or function, limited to one (1) sign located entirely upon the property on which such event or function is held, set back no less than fifteen (15) feet from the property line, and having a maximum sign area of thirty-two (32) square feet. If building-mounted, such signs shall be flat wall signs and shall not project above the roof line. If free-standing, the height of any such sign shall be no more than six (6) feet above normal grade. Such signs shall be allowed no more than thirty (30) days prior to the event or function and must be removed within seven (7) days after the event or function. Such signs may be illuminated in accordance with the restrictions set forth in Section 9.10 hereof.

R. Public Signs. Signs posted by duly constituted public authorities in the performance of their public duties.

S. Real Estate Signs. Portable real estate signs of six (6) square feet or less and a maximum height of five (5) feet, limited to one (1) per road frontage, and advertising the sale, lease or rental of the premises on which erected. Such signs may not occupy a public right-of-way.

T. Regulatory, Directional and Street Signs. Erected by a public agency in compliance with Michigan Manual of Uniform Traffic Control Devices Manual. Tourist Oriented Directional Signs, or “TODS,” shall be included under this provision. Regulatory, directional and street signs may be located within the road right-of-way.

U. Rental Office Directional Signs. Up to two (2) signs identifying or directing motorists to a rental or management office in a multiple family development, provided that such signs are a maximum of four (4) feet in height, are setback a minimum of fifteen (15) feet from any property line or public right-of-way, and do not exceed three (3) square feet in area.

V. Vehicle Signage. Signs located on motor vehicles or trailers bearing current license plates which are traveling or lawfully parked upon public

highways, or parked upon any premises where the sign is not visible from the street.

W. Warning Signs. Signs such as no trespassing or warning of electrical currents or animals, provided that such signs do not exceed six (6) square feet.

X. Way-Finding Signs. Temporary, off-premise way-finding signs may be permitted that direct travelers to a public or quasi-public seasonal or special event. Temporary, off-premise way-finding signs are to be used for directional purposes only and shall be limited to four (4) per event; may be erected on private property only; may not exceed six (6) square feet or four (4) feet in height per sign; and may not be erected for more than twelve (12) days in any calendar year per event; and may not occupy a public right-of-way.

9.6 Schedule of Sign Regulations. The schedule provided below summarizes the quantity, maximum area, maximum height, and minimum setback from existing road rights-of-way permitted for signage requiring a permit under this Section. Detailed requirements for the signs listed below are provided under sub-sections 9.7 and 9.8. Wherever conflict exists between the following schedule and the standards of those sub-sections, those sub-sections shall prevail. Billboards are addressed separately under Section 9.9.

Sign	Number	Max. Area	Max. Height	Min. Setback
Signs in Residential Districts (Section 9.7)				
Agricultural Product Signs	1	16 s.f.	4 ft.	15 ft.
Farm or Estate Signs	1	9 s.f.	6 ft.	15 ft.
Home Occupation Signs	1	2 s.f.	4 ft.[1]	15 ft.
Non-Profit Organization Signs	1	32 s.f.	6 ft.	15 ft.
Residential Development Entranceway Signs	1/entrance	20 s.f.	6 ft.	15 ft.
Temporary Construction Signs	1/frontage	32 s.f.	6 ft.	15 ft.

Sign	Number	Max. Area	Max. Height	Min. Setback
Signs in Non-Residential Districts (Section 9.8				
Awning and Canopy Signs	N/A	25% of surface[2]	N/A	Per district
Free-Standing Signs	See Section 9.8(D)			
Gasoline Price Signs	1	20 s.f.	6 ft.	Per district
Marquee Signs	1/frontage	1½ s.f. per foot of building frontage	Per district	Per district
Office or Industrial Development Entranceway Signs	1/entrance	36 s.f.	6 ft.	15 ft.
Temporary Construction Signs	1/frontage	32 s.f.	6 ft.	15 ft.
Time/Temperature/Stock Market Signs	1/frontage	N/A[3]	6 ft.[1]	15 ft.[1]
Wall Signs	See Section 9.8(J)			
Window Signs	N/A	25% of window area	N/A	N/A

[1] If sign is free-standing.

[2] Such signs shall be counted in determining compliance with maximum permitted area of wall signage.

[3] Such signs shall not be counted in determining compliance with wall or free-standing sign area requirements.

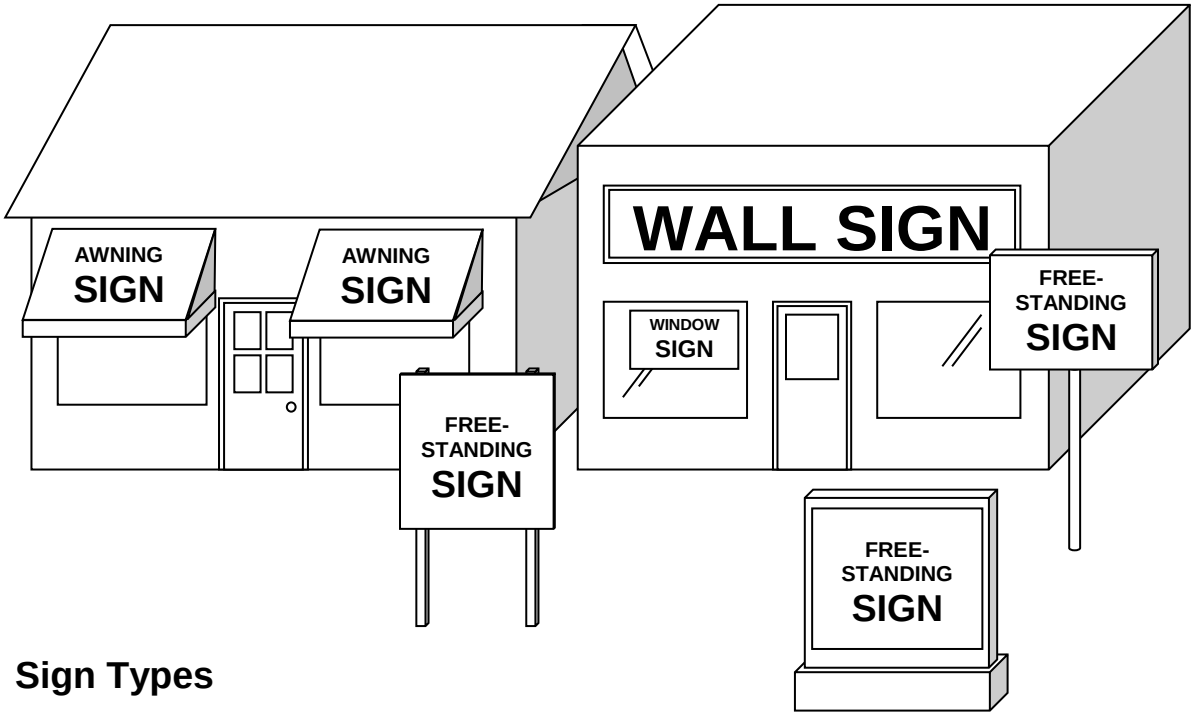

Sign Types

9.7 Signs in Residential Districts. The following signs shall be allowed in the AG, SF-1, SF-2, SF-3, R-1A, R-1, R-2, R-3, RM, and MHC zoning districts, subject to permit approval in accordance with Section 9.11 and the following standards. Such signs shall only pertain to permitted or special land uses, and shall be located upon the same property to which the sign relates, unless otherwise provided herein.

A. Agricultural Product Signs. In the AG, SF-1, SF-2, and SF-3 districts, one (1) sign advertising agricultural and/or horticultural products grown on the premises shall be permitted in conjunction with a temporary roadside stand. The sign shall not exceed sixteen (16) square feet in area, four (4) feet in height nor be located closer than fifteen (15) feet to any property line. The sign shall be erected not more than two weeks prior to opening of sales and removed within on (1) week of the end of sales.

B. Farm or Estate Signs. Signs in the AG and SF-3 districts displaying the name of one permitted business, farm or estate, not to exceed nine (9) square feet in area and six (6) feet in height. One (1) such sign shall be permitted per farm or estate, in addition to the home occupation sign permitted under item C, below. Such a sign may be indirectly illuminated, provided that all lighting equipment for these signs shall be designed to illuminate the sign only and shall not interfere with driver visibility or cause glare on adjoining properties.

C. Home Occupation Signs. Either one (1) wall or one (1) freestanding sign per parcel containing a permitted home occupation, with a minimum setback from the street right-of-way of fifteen (15) feet, and not exceeding two (2) square feet in area and four (4) feet in height. Such signs may not be illuminated, and must be consistent with the residential character of the neighborhood in which they are to be located.

D. Non-Profit Organization Signs. Permanent, free-standing signs identifying churches, schools, museums, libraries or other non-profit institutions, at a rate of one (1) sign per parcel, with a minimum setback from the street right-of-way of fifteen (15) feet, which does not exceed thirty-two (32) square feet in area and six (6) feet in height.

E. Residential Development Entranceway Signs. Permanent freestanding signs or signs affixed to decorative walls or fences identifying the entrances of residential developments such as subdivisions, apartment complexes, condominium communities, senior housing complexes, mobile home parks and similar uses, at a rate of one (1) per entranceway, not to exceed a total of two (2), with a minimum setback from the street right-of-way of fifteen (15) feet, and not exceeding twenty (20) square feet in area and six (6) feet in height. Where such sign is placed upon a decorative wall or fence, the area of the sign shall be computed by measuring the area of the envelope required to enclose the lettering, graphics and border, if any, not the entire decorative wall or fence. Such decorative walls and fences shall conform to the provisions of Section 7.10.

F. Temporary Construction Signs. Temporary signs which advertise the construction of new residential subdivisions or similar permitted development, not to exceed thirty-two (32) square feet in area and six (6) feet in height. Such signs shall be removed immediately after the last available lot, home-site or parcel is sold.

9.8 Signs in Non-Residential Districts. The following signs shall be allowed in the O, C-1, C-2, I-1, I-2 and RO zoning districts, subject to permit approval in accordance with Section 9.11 and the following standards. Such signs shall only pertain to permitted or special land uses, and shall be located upon the same property to which the sign relates, unless otherwise provided herein.

A. Signs for Residential District Uses in a Nonresidential District. Signs for non-conforming residential district uses in a nonresidential district shall be governed by the sign regulations for residential district uses.

B. Signs for Non-conforming Non-Residential Uses. Signs for non-conforming nonresidential uses in an office, commercial or industrial district (for example, a non-conforming commercial use in an industrial district) shall be governed by the sign regulations which are appropriate for the type of use, as specified in this Section.

C. Awning and Canopy Signs. Permanent signs on awnings and canopies shall be permitted, subject to the following standards:

1. Coverage. The total area of the lettering and logo shall not exceed twenty-five (25) percent of the total area of the awning or canopy that is visible from the street.

2. Compliance with Size Requirements for Wall Signs. The area of signs on awnings or canopies shall be counted in determining compliance with the standards for total area of wall signs permitted on the parcel.

3. Projection. Limitations imposed by this Ordinance concerning projection of signs from the face of a wall or building shall not apply to awning and canopy signs, provided that such signs shall comply with the setback requirements for the district in which they are located.

D. Free-Standing Signs. Freestanding signs shall be permitted, subject to the following regulations:

1. Number. One (1) permanent freestanding sign shall be permitted per street or highway frontage on each parcel. In multi-tenant buildings or shopping centers the sign area may used to identify the name of the shopping center or multi-tenant building.

2. Maximum Height and Area Requirements. Maximum height and area requirements for free-standing signs shall be applied within each non-residential zoning district according to the standards set forth below:

Maximum Height and Area Requirements for Free-Standing Signs			
		Maximum Area (Square Feet)	
District	**Maximum Height (feet)**	**Per Side**	**Total**
C-1 Local Commercial	6	32	64
C-2 General Commercial	6	50	100
O Office	6	50	100
RO Research-Office	6	60	120
I-1 Light Industrial	6	50	100
I-2 General Industrial	6	60	120

3. Setback from the Right-of-Way. Freestanding signs may be located in the required front yard, provided that no portion of any such sign shall be located closer than fifteen (15) feet to the existing right-of-way line. If a parcel is served by a private road or service road, no portion of a freestanding sign shall be closer than

fifteen (15) feet to the edge of the road or private road easement/right-of-way.

4. Setback from Residential Districts. Freestanding signs shall be located no closer than fifty (50) feet to any residential district.

E. Gasoline Price Signs. Gasoline price signs shall be permitted, subject to the following standards:

1. Number. One (1) gasoline price sign shall be permitted for each gas station.

2. Size. Gasoline price signs shall not exceed twenty (20) square feet in area. Gasoline price signs shall not be counted in determining compliance with the standards for total area of wall or freestanding signs permitted on the parcel.

3. Height. The height of a gasoline price sign shall not exceed six (6) feet.

4. Setback. Gasoline price signs shall comply with the setback and height requirements specified for freestanding signs in the district in which the signs are located.

F. Marquee Signs. Marquee signs shall be permitted for theaters located in commercial districts, subject to the following requirements:

1. Number. One (1) marquee shall be permitted per street frontage.

2. Size. The total size of a marquee sign shall not exceed one and one-half (1 1/2) square feet per lineal foot of building frontage.

3. Compliance with Size Requirements for Wall Signs. The area of permanent lettering on a marquee sign shall be counted in determining compliance with the standards for total area of wall signs permitted on the parcel.

4. Construction. Marquee signs shall consist of hard incombustible materials. The written message to be affixed flat to the vertical face of the marquee.

5. Vertical Clearance. A minimum vertical clearance of ten (10) feet shall be provided beneath any marquee.

6. Projection. Limitations imposed by this Ordinance concerning projection of signs from the face of a wall or building shall not apply to marquee signs, provided that marquee signs shall comply with

the setback requirements for principal buildings for the district in which they are located.

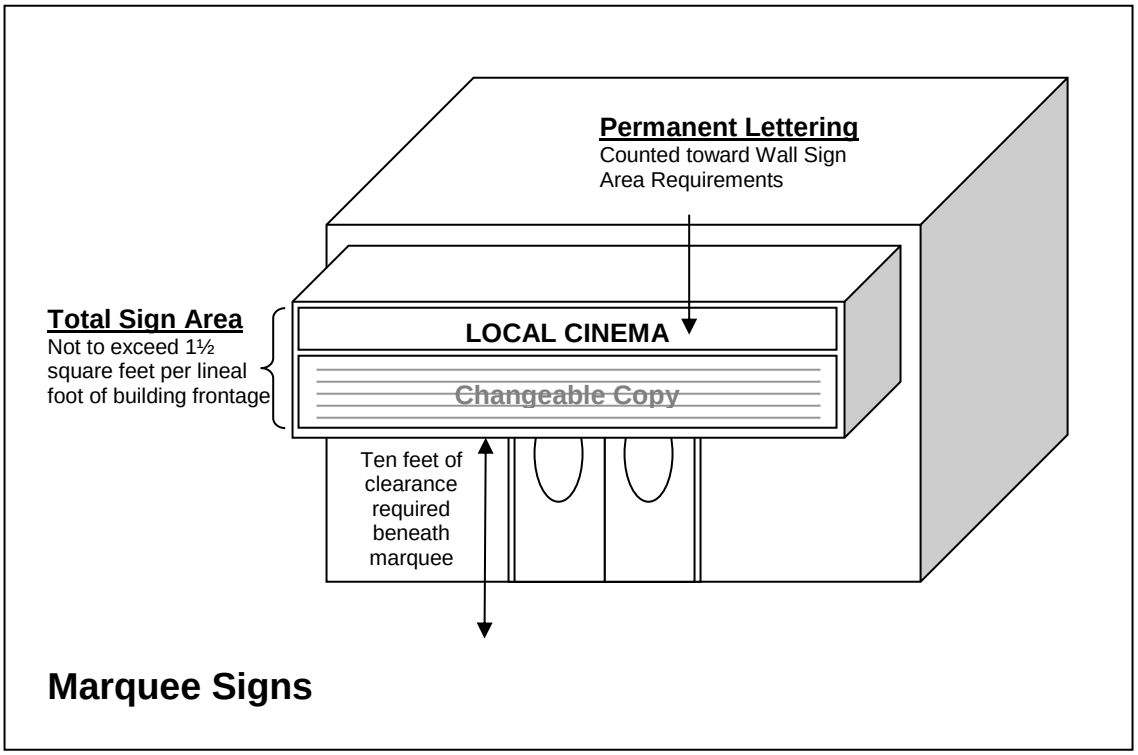

G. Office or Industrial Development Entranceway Signs. Permanent freestanding signs or signs affixed to decorative walls or fences identifying the entrances of office, research or industrial developments, condominiums, or subdivisions composed of multiple businesses on individual lots or units and served by its own public or private road. Such signs shall be provided at a rate of one (1) per entranceway, not to exceed a total of two (2), with a minimum setback from the street right-of-way of fifteen (15) feet, and not exceeding sixty (60) square feet in area per side and six (6) feet in height. Where such a sign is placed upon a decorative wall or fence, the area of the sign shall be computed by measuring the area of the envelope required to enclose the lettering, graphics and border, if any, not the entire decorative wall or fence. Such decorative walls and fences shall be governed as provided under Article 7.

H. Temporary Construction Signs. Temporary signs which advertise the construction of new non-residential development, not to exceed thirty-two (32) square feet in area and six (6) feet in height. Such signs shall be removed immediately after the last available lot, unit or parcel is sold or leased.

I. Time/Temperature/Stock Market Signs. Time, temperature, and stock market signs shall be permitted, subject to the following conditions:

1. Frequency of Message Change. The message change shall not be more frequent than once every ten (10) seconds.

2. Size. The area of these types of signs shall not be included within the maximum sign area permitted on the site.

3. Number. One (1) such sign shall be permitted per street frontage.

J. Wall Signs. Wall signs shall be permitted, subject to the following standards:

1. Number. One (1) permanent wall sign shall be permitted per building on each parcel. In the case of a multi-tenant building or shopping center, one (1) wall sign shall be permitted for each tenant having an individual means of public access. Tenants who occupy a corner space in a multi-tenant structure shall be permitted to have one (1) sign on each side of the building. Where several tenants use a common entrance in a multi-tenant structure, only one (1) wall sign shall be permitted, but the total sign area should be allocated on an equal basis to all tenants.

2. Size. The total area of a wall sign shall be determined by the maximum area requirements set forth in the table below for each zoning district with the exception of buildings which are setback more than one hundred fifty (150) feet back from the road right-of-way, in which case may be allowed to have a maximum square footage not to exceed two hundred (200) square feet.

Maximum Area Requirements for Wall Signs		
District	**Area in Square Feet per One (1) Foot of Frontage**	**Total Maximum Area in Square Feet**
C-1 Local Commercial	1	100
C-2 General Commercial	2	150
O Office	1	100
RO Research-Office	2	150
I-1 Light Industrial	2	200
I-2 General Industrial	2	200

3. Location. One wall sign may be located on each side of a building that faces a street or highway.

4. Vertical Dimensions. The maximum vertical dimension of any wall sign shall not exceed one fourth (1/4) of the building height.

5. Horizontal Dimensions. The maximum horizontal dimension of any wall-mounted sign shall not exceed one-half (1/2) of the width of the building.

6. Height. The top of a wall sign shall not be higher than whichever is lowest:

   a. The maximum building height specified for the district in which the sign is located.

   b. The top of the sills at the first level on windows above the first story.

   c. The height of the building facing the street on which the sign is located.

7. In addition to the wall signage described above, one (1) wall sign measuring no greater than fifteen (15) feet in area shall be permitted at the rear of buildings which have a parking lot or alley located there. In the case of a multi-tenant building or shopping center, one (1) wall sign shall be permitted for each tenant having an individual means of public access facing the rear of the building.

K. Electronic Message Signs. Electronic Message Signs (LED), including fiber-optic signs, shall be permitted only within non-residential zoning districts, as either a freestanding or wall-mounted sign or window sign. Such signs shall be allowed subject to the sign regulations for each district and subject to the following additional regulations:

1. The electronic display shall not be animated, flashing, or scrolling.

2. The frequency of the message change shall be restricted to no more than once very thirty (3) seconds.

3. The maximum area of an electronic message board sign shall be considered part of a wall or freestanding sign and shall not exceed fifty percent (50%) of the total sign area.

4. The maximum height of an electronic message board shall conform to the height regulations for signs allowed in each zoning district.

5. The electronic message sign may not display light of such intensity or brilliance to cause glare, impair the vision of an ordinary driver, or constitute a nuisance. Each electronic message sign must be automatically dimmed as determined by a light level detector on the electronic message sign. The automatic dimming system cannot exceed a level of illumination of five-hundredths (0.05) of a foot-candle (0.538 lux), and a luminaire brightness of sixteen hundred

(1,600) foot-lamberts (lumens of light output per square foot) when measured form the nearest property line. For properties located adjacent to residentially zoned or used land, the following additional standard must be met:

a. All Electronic Message Signs are required to shut off between the hours of 10 PM or the closing time of normal business hours, whichever is later, and 7 AM or the opening of business hours, whichever is earlier.

6. Prior to the issuance of a sign permit, the applicant shall provide written certification from the sign manufacturer that the light intensity has been factory-programmed not to exceed the above listed light levels, and that the intensity level is protected from end-users manipulation by password-protected software.

L. Window Signs. Temporary and permanent window signs shall be permitted on the inside in commercial and office districts provided that the total combined area of such signs (including incidental signs) shall not exceed one-quarter (1/4) or twenty-five (25) percent of the total window area. Temporary window signs shall not be displayed longer than fourteen (14) days.

M. Projecting Signs. Individual projecting signs may be permitted subject to the following:

1. Projecting signs shall be affixed to and mounted perpendicular to the building façade.

2. The signboard shall not exceed twenty (20) square feet per side. If a wall sign is already installed on the structure, the total maximum area of all signage cannot exceed sixty (60) square feet.

3. The distance from the ground to the lower edge of the signboard shall be nine (9) feet minimum.

4. The distance from the building wall to the signboard shall not exceed six (6) inches.

5. The width of the signboard shall not exceed six (6) feet.

6. Fastening and anchorage of the sign to the building must meet applicable Building Code regulations.

9.9 Billboards. In addition to the stated purposes and intent of this Ordinance; the following regulations are intended to protect the public health, safety, and welfare by regulating the location, size, height, spacing and other aspects of billboards. These regulations are necessary because billboards can reduce traffic safety by

diverting the attention of motorists from the road, and because billboards are often incompatible with other signs and land uses in surrounding areas and result in aesthetic deterioration. Where permitted, billboards shall subject to the following restrictions as well as regulations established by the Michigan Highway Advertising Act. P.A. 106 of 1972 as amended.

A. Location. Billboards shall only be permitted in I-1 and I-2 districts which are located on a road which is a primary highway within the meaning of MCL 252.302(f).

B. Number. Not more than three billboards may be located per linear mile of primary highway. The linear mile measurement shall not be limited to the boundaries of the Charter Township of Oxford where the particular highway extends beyond such boundaries. No billboard shall be erected when there already exists in the Township seven (7) or more billboard sign faces which are subject to the permit requirements of this section.

C. Distance between Billboards. No billboard shall be located within 1,000 feet of another off-premise sign abutting either side of the same street or highway or to an adjoining residential zoning district.

D. Area. The surface display area of any side of an off-premise sign may not exceed three hundred (300) square feet. In the case of off-premises sign structures with tandem or stacked sign faces, the combined surface display area of all faces on any side may not exceed three hundred (300) square feet.

E. Height. The height of an off-premise sign shall not exceed twelve (12) feet above: (1) the grade of the ground on which the sign sits or (2) the grade of the abutting roadway, whichever is higher.

F. Setback. No off-premise sign shall be located closer than two hundred (200) feet to a public right-of-way, closer than ten (10) feet to any interior boundary lines of the premises on which the sign is located, nor closer than five hundred (500) feet to any playground, school, residential dwelling, church or park.

G. Illumination. All lighting equipment for billboards shall be designed to illuminate the sign only and shall not interfere with the driver visibility or cause glare on adjoining residential properties. All billboards must be illuminated from a light source exterior to the sign itself.

H. Construction. A billboard shall be self-supported and pole mounted.

9.10 Temporary Signs. Temporary signs shall conform to the following requirements:

A. A temporary sign shall have a maximum height of four (4) feet in residential areas, and six (6) feet in commercial areas, from the natural grade at the base of the sign.

B. Temporary signs shall not exceed six (6) square feet in residential areas, and sixteen (16) square feet in commercial areas, with a maximum of two (2) sides per sign, except banners which shall have a maximum area of twenty-five (25) square feet per side.

C. Except as otherwise provided in this Ordinance, temporary signs shall remain in place no longer than a period of sixty (60) days within a calendar year.

D. The permission of the property owner or their designee shall be required prior to the erection of a temporary sign on any parcel. This includes the placing of a temporary sign on vacant property.

E. Except as otherwise provided in this Ordinance, a temporary sign shall only be allowed to be placed on publicly-owned property, including road rights-of-way, when placed there by and for the benefit of the respective public agency or with the written permission of the public agency.

F. An organization or business that holds a number of events throughout the calendar year, which term “events” shall not be interpreted to mean a “sale”, may apply for an annual temporary sign permit in accordance with the following provisions:

1. Such organization shall provide a list of each event and the date(s) of such event not later than fourteen (14) days prior to the event for which a temporary sign will be erected. Exceptions to the fourteen (14) day requirement may be granted by the Zoning Administrator or his or her designee for fundraising events for national or international disasters or emergencies.

2. Provided such organization has been in compliance with the provisions of this Ordinance, it shall be allowed to apply for a renewal of its temporary sign permit on an annual basis by application to the Building Department in accordance with the requirements of this section.

G. Sandwich or A-frame signs are permitted, if they meet the criteria for temporary signs outlined herein.

H. “Help Wanted” signs not exceeding six (6) square feet in area and four (4) feet in height, which may be displayed on private property for a period of up to four (4) weeks at a time, and not more than four (4) times within each calendar year.

I. A maximum of four (4) off-site temporary signs advertising a house for sale, lease, or rent are allowed without a permit, provided that such signs are removed immediately after the house advertised has been sold, leased, or rented, and provided that such signs comply with the provisions of this Ordinance concerning placements and setbacks from road rights-of-way.

J. Customary holiday displays are exempt from the temporary sign regulations contained in this section.

K. Temporary signs placed upon property in the Township in violation of this Ordinance may be removed only by the Township Ordinance Enforcement Officer, the owner of the sign, or the owner of the property where a sign has been placed, or their designees. Any action taken by the Township under this paragraph shall be noticed to the property owner of record. A temporary sign that has been removed by the Township will be kept for five (5) days, at which time the sign may be destroyed or disposed of by the Township.

9.11 Sign Design Standards.

A. Construction Standards.

1. General Requirements. All signs shall be designed and constructed in a safe and stable manner in accordance with the Township's adopted building code and electrical code. All electrical wiring associated with a freestanding sign shall be installed underground.

2. Architectural Compatibility. Signs shall be designed and constructed to be consistent with the architectural design of the building they identify, as determined by the Zoning Official or Planning Commission in consideration of the following criteria:

   a. Consistency of proposed construction materials to those of the identified building;

   b. Consistency of proposed color scheme to that of the identified building;

   c. Incorporation of architectural details or other embellishment found on the identified building.

3. Building Code. All signs shall be designed to comply with minimum wind pressure and other requirements set forth in the adopted Building Code.

4. Framework. All signs shall be designed so that the supporting framework, other than the supporting poles on a freestanding sign, is contained within or behind the face of the sign or within the building to which it is attached so as to be totally screened from view.

B. Illumination.

1. General Requirements. If illumination is proposed, signs shall be illuminated only by steady, stationary, shielded light sources directed solely at the sign, or internal to it.

2. Non-Glare, Shielded Lighting. Use of glaring undiffused lights or bulbs shall be prohibited. Lights shall be shielded so as not to project onto adjoining properties or thoroughfares, and shall not exceed fifteen (15) foot-candles, measured perpendicular to the sign face, at a distance of four (4) feet.

3. Traffic Hazards. Sign illumination that could distract motorists or otherwise create a traffic hazard shall be prohibited.

4. Bare Bulb Illumination. Illumination by bare bulbs or flames is prohibited.

C. Location.

1. Within a Public Right-of-Way. No sign shall be located within, project into or overhang a public right-of-way, except as otherwise permitted herein.

2. Setback Requirements. All signs shall comply with the setback requirements for this district they are located in, except as otherwise permitted herein, and provided that no freestanding sign is located closer than fifteen (15) feet from any lot line.

3. Clear Vision Area for Motorists. No sign shall be established or maintained on any parcel that will cause a traffic hazard by obstructing the view of drivers. All signs shall be installed in accordance with the requirements for intersection visibility under Section 8.2. Signage must also comply with the requirements of the Road Commission for Oakland County.

D. Height. No freestanding sign shall be greater than six (6) feet in height, unless otherwise provided in this Section.

E. Measurement.

1. Sign Area Measurement. Sign area shall be computed as follows:

a. General Requirements. Where a sign consists of a generally flat surface or sign face on which lettering and other information is affixed, the sign area shall be computed by measuring the entire face of the sign including any framing or borders, but not including the base, pedestal, or other supports upon which the sign may be mounted.

b. Individual Letters. Where a sign consists of individual letters and/or logo affixed directly to a wall or building, the area of the sign shall be computed by measuring the area of the envelope required to enclose the lettering and/or logo.

c. Free-Standing Signs. The area of a double-faced freestanding sign shall be computed using only one (1) face of the sign provided that: 1) the outline and dimensions of both faces are identical, and 2) the faces are back-to-back so that only one face is visible from any given direction. In the case of a multi-faced free-standing sign having more than two sides or those having two sides not back-to-back as described above, the area of the sign shall be computed using the total of all faces of the sign.

d. Cylindrical Sign. The area of a cylindrical ground sign shall be computed by multiplying the circumference of the cylinder by its height.

2. Height Measurement. The height of a sign shall be measured along a straight vertical line from the average grade beneath the sign to the highest point of the sign or supporting structure.

3. Setback and Distance Measurements. The following guidelines shall be used to determine compliance with setback and distance measurements:

a. The distance between two signs shall be measured along a straight horizontal line that represents the shortest distance between the two signs.

b. The distance between a sign and a parking lot or building shall be measured along a straight horizontal line that represents the shortest distance between the outer edge of the parking lot or building.

c. The distance between a sign and a building or property line shall be measured along a straight horizontal line that represents the shortest distance between the sign and the building.

9.12 Sign Permit Review Process.

A. Permit Required. It shall be unlawful for any person to erect, alter, relocate, or structurally change a sign or other advertising structure, unless specifically exempted under Section 9.5, without first obtaining a permit in accordance with the provisions set forth herein. A permit shall require payment of a fee, which shall be established by resolution of the Township Board.

B. Permit Application Contents. Application for a sign permit shall be made upon forms provided by the Zoning Official, or his or her designee. The following information shall be required:

1. Name, address and telephone number of the applicant, as well as that of the property owner, if the applicant is not the property owner.

2. A sketch plan indicating the following:

   a. Current zoning classification;

   b. Location of the building, structure, or lot on which the sign is to be attached or erected;

   c. Position of the sign in relation to nearby buildings, structures, and property lines.

3. A scale drawing of each sign, indicating the size, shape, message, lettering style, color and materials of the finished sign. All required copies must also be in color.

4. Plans, specifications and method of construction and attachment to the building or the ground;

5. Building elevation sketches showing the position and size of each sign on the building and the location and size of any existing sign(s) on the same structure.

6. Copies of stress sheets and calculations, if deemed necessary by the Building Official, or his or her designee, showing the structure as designed for dead load and wind pressure.

7. Information concerning required electrical connections.

8. If the sign will be illuminated, plans shall include all details regarding the location, type of fixture, and color of the illumination, as well as the method of shielding.

9. Written consent of the owner or lessee of the premises upon which the sign is to be erected.

10. Other information deemed necessary by the Zoning Official (or designee) or Planning Commission, on a case by case basis, to establish compliance with applicable laws and regulations.

C. Review by Zoning Official. Upon receipt of a completed sign permit application, the Zoning Official (or designee) shall review the sign permit application, and take one of the following actions:

1. Approval. Upon finding that the proposed signage conforms to all applicable standards found in this section and elsewhere in the Zoning Ordinance, they shall approve the sign permit application, with or without conditions, and issue the sign permit. Should the approval be conditional, said conditions shall be satisfied within the time set by the Zoning Official, or his or her designee, or the permit will be considered to be denied.

2. Postpone. Upon finding that the proposed signage does not conform to all applicable standards found in this section and elsewhere in the Zoning Ordinance, but could if revised or supplemented, the Zoning Official, or his or her designee, may postpone action on the sign permit application, until a revised application is submitted. If the Zoning Official, or his or her designee, chooses to postpone action on the sign permit application, the deficiencies of the application shall be explained to the proprietor in writing.

3. Denial. Upon finding that the proposed signage does not conform to all applicable standards found in this section and elsewhere in the Zoning Ordinance, the Zoning Official, or his or her designee, may deny the sign permit application. Should the sign permit application be denied, the reason(s) for rejection of the application shall be explained to the proprietor in writing.

D. Review by Planning Commission Concurrent with Site Plan. Sign permit applications submitted in conjunction with proposed site improvements that require site plan review and approval may be reviewed by the Planning Commission concurrent with site plan review. If approval of a proposed sign is desired by the applicant at the time of site plan review, the sign must be shown on the site plan, including all information required for a sign permit application listed above under item B. The applicant shall have the option of submitting sign permit applications to the Zoning Official, or his or her designee, separate from site plan review, as provided above under item C, above.

9.13 Inspection and Maintenance. In accordance with Article 16 of this Ordinance, the Zoning Official (or designee) shall be charged with the administration and enforcement of the provisions of this Section.

A. Inspection of New Signs. All signs for which a permit has been issued shall be inspected by the Zoning Official, or his or her designee, when erected. Approval shall be granted only if the sign has been constructed in compliance with the approved plans and applicable Zoning Ordinance and Building Code standards. Failure to receive the Zoning Official's approval for a completed sign shall constitute a determination that the sign is in violation of this Ordinance, in which case the owner and/or erector of such sign may be subject to legal action.

In cases where fastenings or anchorages are to be eventually bricked in or otherwise enclosed, the sign erector shall advise the Zoning Official, or his or her designee, when such fastenings are to be installed so that inspection may be completed before enclosure.

B. Sign Maintenance. All signs shall be maintained in a condition similar to that which existed at the time of their erection. At minimum, all signs and all awnings with sign components shall be kept clean, free of missing or loose parts, free of blistering or peeling paint, and without missing or obsolete sign panels.

C. Inspection of Existing Signs. The Zoning Official, or his or her designee, shall have the authority to routinely enter onto property to inspect existing signs, in accordance with Article 16. In conducting such inspections, the Zoning Official, or his or her designee, may determine whether the sign is maintained in accordance with item B, above, and that it is adequately supported, painted to prevent corrosion, and so secured to the building or other support as to safely bear the weight of the sign and pressure created by the wind.

D. Correction of Defects. If a sign falls out of compliance with the provisions of this Section, it shall be the responsibility of the sign owner to bring the sign back into compliance or remove the sign entirely.

9.14 Non-Conforming Signs. No non-conforming signs shall be altered or reconstructed, unless the alteration or reconstruction is in compliance with this ordinance, except that non-conforming signs shall comply with the following regulations:

A. Repairs and Maintenance. Normal maintenance shall be permitted, provided that any non-conforming sign that is destroyed by any means to an extent greater than fifty (50) percent of the sign's pre-catastrophe fair market value, exclusive of the foundation, shall not be reconstructed. Normal maintenance shall include painting of chipped or faded signs;

replacement of faded or damaged surface panels, name changes, repair or replacement of electrical wiring or electrical devices.

B. Change of Copy. A non-conforming sign may undergo a “change of copy” or the replacement of names, logos, symbols, numbers or other graphic items of information as long as the structural characteristics, including size, shape, and frame, are not modified.

C. Non-conforming Changeable Copy Signs. The message on a non-conforming changeable copy sign or non-conforming bulletin board sign may be changed provided that the change does not create any greater nonconformity.

D. Substitution. No non-conforming sign shall be replaced with another non-conforming sign.

E. Modifications to the Principal Building. Whenever the principal building on a site on which a non-conforming sign is located is modified to the extent that site plan review and approval is required, the non-conforming sign shall be removed. However, a change of use or occupant, when not accompanied by a change in the principal building, shall not necessitate the removal of non-conforming signs.

9.15 Removal of Prohibited Signs in Public Places. The Charter Township of Oxford Zoning Official, or his or her designee, shall have the authority to remove any sign determined to be in violation of the preceding section that is located upon public property. Notification of the sign owner shall not be required. Such signs shall be held at the Township offices for five (5) days upon removal. A ten dollar ($10.00) service fee shall be required prior to the release of any sign removed by the Township.

9.16 Removal of Unauthorized Signs from Public Rights-of-Way. In the interest of public health, and safety, the Charter Township of Oxford Zoning Official, or his or her designee, shall have the authority to immediately remove any unauthorized sign from all public rights-of-way without notification of the sign owner. Such signs shall be held at the Township offices for five (5) days upon removal. A ten dollar ($10.00) service fee shall be required prior to the release of any sign removed by the Township.

9.17 Appeals. Any party who has been refused a sign permit for a proposed sign may file an appeal with the Zoning Board of Appeals, in accordance with Article 17 of this Ordinance.

ARTICLE 10
ENVIRONMENTAL PROVISIONS

10.1 Environmental Performance Regulations.

A. Purpose. Environmental performance regulations are established in order to preserve the short and long-term environmental health, safety, and quality of the Township. These regulations are established as minimum requirements to be maintained. Nothing contained herein is intended to restrict farming operations in accordance with the Michigan Right to Farm Act, PA 93 of 1981.

B. Smoke and Air Contaminants. It shall be unlawful for any person, firm, or corporation to permit the emission of any smoke or air contaminant from any source whatsoever to a density greater than that permitted by Federal Clean Air Standards and those standards promulgated by the Michigan Department of Environmental Quality according to Act 348 of 1965, either of which act may be amended or superseded from time to time. There shall not be discharged from any source whatsoever such quantities of air contaminants or other material which would, individually, cause injury, detriment or nuisance to the public or which endanger comfort, repose, health, or safety of persons or which cause injury or damage to business or property.

C. Gases. The escape or emission of any gas that is injurious or destructive, harmful to person or property, or explosive shall be unlawful and shall be abated.

D. Odors. Any condition or operation which results in the creation of odors of such intensity and character as to be detrimental to the health and welfare of the public or which interferes unreasonably with the comfort of the public shall be removed, stopped, or so modified as to remove the odor. Certain agricultural operations may be regulated under the State of Michigan, Department of Agriculture's Generally Accepted Agricultural Management Practices (GAAMPS).

E. Dust, Dirt, and Fly Ash. No person, firm, or corporation shall operate any process, device, or equipment in a manner that causes dust, dirt, or fly ash to settle upon or otherwise interfere with the use of other properties.

F. Glare or Heat.

1. Glare from any process (such as or similar to arc welding or acetylene torch cutting) which emits harmful ultraviolet rays shall be per-

formed in such a manner as not to be seen from any point beyond the property line, and as not to create a public nuisance or hazard along lot lines.

2. The design and/or screening of the development shall insure that glare from automobile and commercial or industrial vehicle headlights shall not be directed into any adjacent property, particularly residential property.

3. Any operation which produces intense glare or heat, shall be conducted within an enclosure so as to completely obscure and shield such operation from direct view form any point along the lot lines. If heat is a result of an industrial operation, it shall be so insulated as to not raise the temperature at any property line at any time.

4. Exterior doors shall be located, operated, and maintained so as to prevent any glare and light from creating a nuisance or safety hazard to operators of motor vehicles, pedestrians, and neighboring land uses.

5. Exterior lighting shall be installed, maintained and operated in accordance with the requirements of Section 10.2.

G. Radioactive Materials Radioactive materials and wastes, and including electro- magnetic radiation such as x-ray machine operation, shall not be emitted to exceed quantities established as safe by the U.S. Bureau of Standards, when measured at the property line.

H. Electrical Disturbance, Electromagnetic, or Radio Frequency Interference. No use shall:

1. Create any electrical disturbance that adversely affects any operation or equipment other than those of the creator of such disturbance.

2. Cause, create, or contribute to the interference with electronic signals (including television and radio broadcasting transmission) to the extent that the operation of any equipment not owned by the creator of such disturbance is adversely affected.

I. Fire and Explosive Hazards. Any activity involving the storage, handling or use of flammable or explosive materials shall comply with the Rules and Regulations of the State of Michigan.

J. Noise.

1. No operation or activity shall cause or create noise that exceeds the sound levels prescribed below, using an A-weighted decibel scale dB(A), when measured at the lot line of any adjoining use, based upon the following maximum allowable levels for each use district:

Zoning of Adjoining Land Use	**Maximum Allowable Noise Level measured in dB (A)**	
	7 am to 9 pm	**9 pm to 7 am**
R-1A, R-1, R-2, R-3, SF-1, SF-2, SF-3, MHP, RM, AG, R	60	50
O, C-1, C-2	70	60
I-1, I-2, RO	85	75

Noise level measurements for comparison with the above limits shall be made using A-Weighted fast response measurements, using the “Max-Hold” feature of a spectrum analyzer.

For the purposes of this sub-section J., the term “adjoining use” shall include properties directly across any private or public road from the use whose noise is being measured (in addition to those which actually abut the property line of the use).

2. Residential Lawn Care Exemption. Noise created by the reasonable use of equipment for the purposes of residential lawn care shall be exempt from the regulations of this sub-section J. concerning the hours of 7:00 a.m. to 9:00 p.m.; such noise shall be subject to the regulations of this sub-section J. concerning the hours of 9:00 p.m. to 7:00 a.m.

K. Vibration. No operation or activity shall cause or create vibration that exceeds the vibration levels prescribed below when measured at the lot line or any adjoining use* based upon the following maximum allowable levels:

Daytime 7:00 a.m. – 10:00 p.m.		
Frequency Range:	Vibration Metric:	Vibration Limit: (Level Shall Not Exceed)
6 Hz. And below	Acceleration	8000 μ meters/sec^2
Above 6 Hz.	Velocity	200 μ meters/sec
Nighttime 10:00 p.m. – 7:00 a.m.		
Frequency Range:	Vibration Metric:	Vibration Limit: (Level Shall Not Exceed)
6 Hz. And below	Acceleration	4000 μ meters/sec^2
Above 6 Hz.	Velocity	100 μ meters/sec

*For the purposes of this subsection 10.1(K), the term "adjoining use" shall include properties directly across any private or public road from the use whose vibration is being measured (in addition to those which actually abut the property line of the use).

10.2 Exterior Lighting.

A. Purpose. This section provides standards for various forms of outdoor lighting so as to properly illuminate buildings and sites for safety and security without contributing to light pollution, intrusive artificial light or degradation of the natural nighttime visual environment.

B. Applicability. The standards in this Section shall apply to any light source that is visible from any property line, or beyond, for the site from which the light is emanating. Whenever a person is required to obtain a building permit, electrical permit for outdoor lighting or signage, a special land use permit, subdivision approval or site plan approval from the Township, the applicant shall submit sufficient information to assure the Zoning Administrator and/or Planning Commission that the proposed lighting can comply with this Section. Applicant shall bear responsibility for the actual performance of lighting in compliance with these requirements.

C. Definitions. The following terms, phrases, words and their derivatives shall have the meaning given in Article 2 of this Ordinance, unless the context otherwise requires:

Canopy Structure	Luminaire
Foot-candle	Luminous Tube Lighting
Glare	Photometric Grid or Study
Lamp	Shielded Fixture
Light Fixture	Spill Light
Light Pollution	Useful Light
Light Trespass	

D. Lighting Plan Submittal Requirements. The following information must be included on all site plan submissions:

1. Provide locations of all freestanding, building-mounted and canopy light fixtures on the site plan and/or building elevations. Include a legend that identifies the fixtures and their intended accessories by manufacturer and model numbers.

2. Provide a photometric grid overlaid on the proposed site plan indicating the light intensity throughout the site (in foot-candles). The Planning Commission is authorized to waive the requirement of a photometric grid when it is determined that such information is not necessary for site plan review.

3. Provide all manufacturers' published specifications and cut sheets for the type of fixture being proposed including the total luminance output, type of lamp and voltage, method of shielding and all applicable accessories.

4. Any other information deemed necessary to determine the appropriateness of illumination by the Zoning Administrator and/or Planning Commission.

E. Lighting Standards. Unless exempted under this Section, all lighting must comply with the following standards:

1. Freestanding Pole Lighting. Exterior lighting shall be fully shielded and directed downward to prevent off-site glare. The intensity of light at the base of a light fixture shall not exceed twenty (20) foot-candles unless lights are recessed within an overhead roof or canopy structure.

   a. Site Lighting. Properties adjacent to residential properties shall be designed and maintained such that illumination levels shall not exceed 0.3 foot-candles at or beyond property

lines. Lighting for uses adjacent to non-residential properties shall be designed and maintained such that illumination levels do not exceed 1.0 foot-candles at or beyond property lines.

b. Parking Lot Lighting. Parking lot illumination shall average no less than the following minimum levels over the entire area measured five (5) feet above the surface:

Parking Lot Size	Parking Lot Average Illumination (in foot-candles, minimum)
Small (5-10 spaces)	0.4
Medium (11-99 spaces)	0.6
Large (100+ spaces)	0.9

c. Metal halide, incandescent, fluorescent or mercury vapor fixtures shall be used in an effort to maintain a unified lighting standard throughout the Township and reduce light pollution. Suitable applications for high pressure sodium and low pressure sodium fixtures may be used but only with color corrected and shielded lenses.

d. The Planning Commission may approve decorative or historic light fixtures as an alternative to shielded fixtures when it can be proven that there will be no off-site glare and the proposed fixtures will be more consistent with the character of the site.

e. The maximum height of pole fixtures shall be twenty (20) feet, or the height of the building, whichever is less, measured from the ground level to the centerline of the light source. Fixtures should provide an overlapping pattern of light at a height of seven (7) feet above ground level. The Planning Commission may permit a maximum height of thirty (30) feet in a commercial or industrial district where fixtures are no closer than two hundred (200) feet to any residential property.

f. All outdoor lighting fixtures, existing or hereafter installed and maintained upon private property within commercial, industrial and office zoning districts shall be automatically turned off or reduced by no less than 50% in intensity between 11:00 p.m. and sunrise, except where active use con-

tinues after 11:00 p.m., but only for so long as such use continues.

g. No exposed luminous tube lighting shall be used.

2. Building-Mounted Lighting.

a. Building-Mounted lighting shall be fully shielded and directed downward to prevent off-site glare. The intensity of light shall not exceed twenty (20) foot-candles unless lights are recessed within an overhead roof or canopy structure. Light shall not exceed 0.3 foot-candles beyond new and existing residential property lines and 1.0 foot-candles beyond non-residential property lines.

b. Metal halide, incandescent, fluorescent or mercury vapor fixtures shall be used in an effort to maintain a unified lighting standard throughout the Township and prevent light pollution. Sodium vapor fixtures may be used but only with color corrected and/or shielded lenses.

c. Lighting fixtures mounted to the underside of gas station canopies or other such shelters shall be recessed into the canopy, such that the lens of the lighting fixture is flush with the underside of the canopy.

d. The Planning Commission may approve decorative or historic light fixtures as an alternative to shielded fixtures when it can be proven that there will be no off-site glare and the proposed fixtures will be more consistent with the character of the site.

e. Luminous tube and exposed bulb fluorescent lighting is prohibited as an architectural detail on all buildings, e.g. along the roof line and eaves, around windows, etc. The Planning Commission may approve internally illuminated architectural bands or external lighting directed on buildings where it can be shown that the treatment will serve a legitimate function and will not adversely impact neighboring properties or create glare offsite.

3. Sign/Canopy Lighting.

a. Sign lighting may be directed upward, downward or may be internal to the sign.

b. Downward and upward directed sign lighting shall illuminate the sign only, and light spill over shall not exceed 1.0 foot-candles along non-residential property lines, and 0.3 foot-candles along residential property lines.

c. Upward sign lighting shall illuminate the sign only, and any point source or glare of light shall not be visible from adjacent properties, adjacent roadways or safety paths. Light shall not spill past the sign to the extent that it is visible from beyond the property.

d. All internal sign lighting shall illuminate the sign only. Internal lighting shall be evenly distributed over the sign so as not to cause glare. Internal light sources shall not be directly visible from any location. Projected sign illumination intensity shall not exceed one (1) footcandle as measured four (4) feet above the ground and ten (10) feet from the base of the sign.

e. All internally lit translucent or fabric awnings shall be prohibited within any zoning district, unless the Planning Commission determines that the following conditions are met:

i Internal light sources are not directly visible from the road rights-of-way.

ii Light levels comply with other ordinance provisions and are not offensive to the adjoining neighbors.

iii Any proposed signage on a translucent or fabric awning, whether illuminated or not, shall comply with Section 9.8(C).

F. Single-Family Residential Lighting Standards. All outdoor lighting in single-family residential zoning districts shall be shielded or directed in a manner which reduces glare and shall be so arranged as to prevent objectionable lighting from intruding upon any adjacent residential district or adjacent residence, but shall otherwise be exempt from the provisions of this Section.

G. Non Residential Uses in Residential Zoning Districts. For non-residential uses allowed in residential zoning districts such as churches, schools and municipal facilities, etc., all illumination shall be subject to Section 10.2.

H. Prohibited Lighting Types. The following lighting types are prohibited within Township:

1. The use of search lights or any similar high intensity light for outdoor advertisement or entertainment.

2. Flashing, moving or intermittent type lighting.

3. Building or roof mounted lighting intended to attract attention to a building and/or use, which is not strictly designed for security purposes or architectural accent, or which projects light beyond the property.

4. Exterior exposed luminous tube lighting.

I. Exemptions. The following are exempt from the lighting requirements of this Section, except where, upon consideration of the extent, intensity and duration of glare or light trespass created, the Zoning Administrator determines that the regulation of such is necessary to protect the health, safety and welfare of the public.

1. Swimming pools.

2. Holiday decorations.

3. Lighting of roadways and lights within the public road right-of-way.

10.3 Natural Feature Setback.

A. For any use requiring site plan approval, condominiums subdivision plan approval, plat approval, private or public road approval, or a Land Improvement Permit under Ordinance No. 108A as amended, there shall be maintained in all districts a natural features setback, as provided herein, unless and to the extent, it is determined to be in the public interest not to maintain such a setback. The intent of this provision is to require a minimum setback from wetlands and watercourses, and to regulate property within such setback in order to:

1. Prevent physical harm, impairment or destruction of or to such wetlands and watercourses. It has been determined that, in the absence of such a minimum setback, intrusions in or on to such areas would occur, resulting in harm, impairment or destruction of the same contrary to the public health, safety and general welfare.

2. Protect unique wildlife habitat and habitat transition, including, without limitation, feeding, nesting, resting and traveling areas for numerous animals.

3. Protect surface water run-off and water quality for pollution prevention purposes, and assist in beneficial water recharge for drinking, irrigation and other purposes.

4. Provide water storage area in storm events.

5. Provide areas for recreational or other functional uses which are unique due to geographic relationship to natural feature.

6. Preserve aesthetic views and areas for the enjoyment of natural resources.

7. Preserve threatened and endangered species habitat, including upland species.

8. Reduce the need for on-site and off-site storm water storage capacity based upon the availability of a greater area of absorption and a smaller impervious area.

9. Stabilize and protect soil resources, including the prevention of erosion and prohibition of the loss due to moving water resulting in destruction of upland, structures and infrastructure on the upland, and prevention of the alteration of the course of moving waters.

This regulation is based on the police power, for the protection of the public health, safety and welfare, including the authority granted in the Michigan Zoning Enabling Act (P.A. 110 of 2006).

B. For purposes of this regulation the terms "wetland" or "watercourse" shall be defined as set forth in Charter Township of Oxford Ordinance No. 80B. The setback required to be maintained by this regulation shall be twenty-five (25) feet from the boundary of a wetland, and twenty-five (25) feet from the ordinary highwater mark of a watercourse.

C. Within an established wetland or watercourse setback subject to this Section, unless and only to the extent determined to be in the public interest by the body undertaking plan review, there shall be no deposition of any material, removal of any soils, minerals and/or vegetation, dredging, filling or land balancing, or construction of any temporary or permanent structures.

D. In determining whether proposed activities are in the public interest, the benefit which would reasonably be expected to accrue from the proposal shall be balanced against the reasonably foreseeable detriments of the construction or other activity, taking into consideration the local, state, and national concern for the protection and preservation of the natural feature

in question. If, as a result of such a balancing, there remains a debatable question whether the proposal is clearly in the public interest, authorization for the construction or other activity within the setback shall not be granted. The following general criteria shall be applied in undertaking this balancing test:

1. The relative extent of the public and private need for the proposed activity.

2. The availability of feasible and prudent alternative locations and methods to accomplish the expected benefits from the activity.

3. The extent and permanence of the beneficial or detrimental effects which the proposed activity may have on the public and private use to which the area is suited, including the benefits the wetland or watercourse setback provides.

4. The probable impact of the proposed construction or other activity in relation to the cumulative effect created by other existing and anticipated activities in the wetland or watercourse to be protected.

5. The probable impact on recognized historic, cultural, scenic, ecological, or recreational values, and on fish, wildlife and the public health.

6. The size and quantity of the wetland or watercourse setback being considered.

7. The amount and quantity of the remaining wetland or watercourse setback.

8. Proximity of the proposed construction and/or operation in relation to the wetland or watercourse, taking into consideration the degree of slope, soil type and the nature of the wetland or watercourse to be protected.

9. Economic value, both public and private, of the proposed construction and/or operation, and economic value, both public and private, if the proposed construction and/or operation were not permitted.

10. The necessity for the proposed construction and/or operation.

E. If and to the extent the Township is prohibited by law or ordinance from regulating the proposed activity in or on the respective wetland or watercourse, regulation under this Section shall be exempted.

10.4 Open Dumping.

A. No garbage, sewage, filth, refuse, waste, trash, debris, or rubbish, including cans, bottles, waste paper, cartons, boxes, and crates, or other offensive or obnoxious matter shall be piled, placed, stored or dumped on any land within the township until the operator has obtained a solid waste permit from the Michigan Department of Environmental Quality and Township Board approval.

B. All uses in every zoning district shall place waste materials in an appropriate covered container and properly dispose of same at least once each month in accordance with all applicable laws and ordinances.

C. Nothing contained herein shall prevent the reasonable use of fertilizers, manures, and similar materials for the improvement of land utilized for agricultural purposes, provided that such is done in accordance with the Generally Accepted Agricultural Management Practices (GAAMPs), as set forth by the Michigan Department of Agriculture pursuant to the Right to Farm Act.

10.5 Outdoor Storage.

A. The outdoor storage of commercial vehicles, equipment, supplies, materials or similar items shall be permitted in industrial districts (I-1 and I-2) only when illustrated on a site plan approved by the Planning Commission pursuant to Article 12. Such outdoor storage shall be prohibited in all other districts, with the exception of commercial vehicles and equipment on residentially-zoned and used property as provided in Section 8.8(A).

B. Outdoor storage, as permitted under Section 10.5(A), shall be subject to the following standards:

1. Outdoor storage shall be limited to the rear yard area.

2. Outdoor storage shall be completely fenced with chain link fence at least eight (8) feet in height. The Planning Commission has the ability to deviate from this requirement provided it is demonstrated that an alternative fence height and/or landscape screen can be provided which achieves the same effect as a conventional eight (8) foot fence.

3. Outdoor storage shall be screened from view from adjacent public road rights-of-way and adjacent residentially zoned or used properties in accordance with Section 7.4(E).

C. This Section shall not apply to open air businesses and the outdoor sales and display of products, which are regulated under Section 6.13.

D. This Section shall not apply to seasonal and temporary outdoor sales operations, which are regulated under Section 6.15.

10.6 Safety. Existing hazards or potential hazards and nuisances, as listed below, shall be enclosed by suitable fencing or barriers so as not to endanger public health, safety and welfare:

A. Construction or demolition sites;

B. Junk yards, land fills, and sanitary land fills;

C. Unused basements, abandoned wells and cisterns;

D. Sand, gravel, and stone pits or piles;

E. Uses or activities similar to those listed above.

ARTICLE 11
PRIVATE ROADS

11.1 Intent. This Article is intended to protect and promote the public health, safety, comfort, convenience and general welfare of the Charter Township of Oxford by regulating the location and design of private roads and establishing minimum standards and specifications for the construction of private roads. Such regulations and minimum standards are necessary to ensure that private roads remain passable in all weather conditions and are adequate to provide safe, year-round access by fire, police and other pubic and emergency vehicles. Such regulations and minimum standards are also necessary to ensure proper layout and design of roads in order to form a functional street transportation network; promote and coordinate effective and energy efficient development; and prevent duplication of roads.

11.2 General Requirements.

A. Private roads shall not be constructed, altered, relocated, widened or maintained in the Charter Township of Oxford except in conformance with this Article and the Charter Township of Oxford Design Standards and Construction Specifications Manual.

B. Land shall not be divided, partitioned or assembled in the Charter Township of Oxford unless the resulting parcel(s) have frontage, as required under Section 8.1, on either a public road or a private road approved and constructed in accordance with the standards of this Article and the Charter Township of Oxford Design Standards and Construction Specifications Manual.

C. Building permits shall not be issued by the Charter Township of Oxford unless the proposed building, structure or improvement requiring building permit approval is located on a lot or parcel having the required frontage on either a public road or a private road approved and constructed in accordance with the standards of this Article and the Charter Township of Oxford Design Standards and Construction Specifications Manual.

D. Private roads that create or increase non-conformities on any lot or parcel shall not be approved.

E. No lot or parcel of land shall be sold or otherwise conveyed within the Charter Township of Oxford unless said lot or parcel fronts upon either a public road or a private road meeting the standards of this Article, or unless said contract, deed or other conveyance of sale contains the following language:

"This lot/parcel is not a buildable site for the reason that said lot/parcel does not front on an acceptable ingress and egress in accordance with standards as set forth by the Zoning Ordinance of the Charter Township of Oxford."

11.3 Design and Construction Standards. Private roads shall conform to the following design and construction standards, as well as those contained in the Charter Township of Oxford Design Standards and Construction Specifications Manual:

A. Easement Width. Private road easements shall be no less than sixty (60) feet in width, with the exception of those intended to serve industrial properties, which shall be no less than seventy (70) feet in width. Where a cul-de-sac turnaround is provided, the private road easement shall be no less than sixty (60) feet in radius, except in the case of those intending to serve industrial properties, which shall be no less than eighty (80) feet in radius.

B. Road Length. Dead end private roads shall not exceed 1,000 feet in length, measured from the right-of-way or easement line of the intersecting road to the center of the cul-de-sac turn-around. Measurement of length shall be made down the centerline of the private road.

C. Connection to Public Roads.

1. The connection between private roads and adjacent public roads shall be designed and constructed in accordance with standards of the Road Commission for Oakland County (RCOC) or the Michigan Department of Transportation (MDOT), as applicable. Evidence of RCOC or MDOT approval shall be provided prior to Planning Commission approval.

2. Roads serving more than 20 lots or units shall have two connections to an adjacent public or private roadway.

D. Roadway Surfacing.

1. With the exception of item 2., below, all private roads in the Charter Township of Oxford shall be paved with either asphalt or concrete.

2. Notwithstanding item 1., above, private roads serving ten (10) or fewer single-family residential lots or parcels may be surfaced with aggregate, provided that all lots or parcels served have a net lot area of no less than two and one-half (2.5) acres. As a condition of approving an aggregate private road, it shall be required that deed restrictions be recorded for all properties serviced by the private road, indicating the following:

a. Any parcels accessed by the aggregate private road having less than two and one-half (2.5) acres in net lot area shall be deemed unbuildable;

b. Following development of the first ten (10) parcels accessed by the aggregate private road, all subsequent parcels shall be deemed unbuildable;

c. The property may only be used for single-family residential uses.

3. The required width of road surfacing shall be in accordance with the Charter Township of Oxford Design Standards and Construction Specifications Manual. Adequate width of road surfacing shall be provided to accommodate on-street parking, where proposed.

4. The proposed roadway shall be centered within the private road easement.

E. Turn-arounds. All dead-end private roads shall end in a cul-de-sac turn-around having a minimum radius as specified in the Charter Township of Oxford Design Standards and Construction Specifications Manual. This requirement may be waived or modified by the Planning Commission in the case of private roads having a boulevard cross-section and/or one (1) travel lane in each direction, and where it can be demonstrated to the satisfaction of the Township Engineer and Fire Chief that safe and efficient circulation will be maintained.

F. Intersections. Intersections between private roads shall be as close to ninety (90) degrees as possible, but no less than eighty (80) degrees nor greater than one hundred (100) degrees.

G. Sight Distance. Sight distances on horizontal and vertical curves and at intersections shall be in accordance with the Charter Township of Oxford Design Standards and Construction Specifications Manual.

H. Grading and Drainage

1. Road grades shall be in accordance with the Charter Township of Oxford Design Standards and Construction Specifications Manual.

2. Private roads shall be adequately drained so as to prevent flooding and erosion of the roadway and to maintain a safe, passable condition, in accordance with the Charter Township of Oxford Design Standards and Construction Specifications.

3. Curb and gutter shall be required for private roads serving single-family residential lots with lot widths of less than 120 feet. Private

roads serving multiple-family residential and non-residential development shall also require curb and gutter. As a condition of approving a private road without curb and gutter, it shall be required that deed restrictions be recorded for all properties serviced by the private road, indicating that, should single-family lots having widths of less than 120 feet be accessed via the private road, the installation of curb and gutter shall be required.

I. Road Names and Signage.

1. Road names shall not be permitted which might cause confusion with names of existing roads in or near the Township. Roads that will serve as continuations of existing roads shall be called by the same names as such existing roads. All names shall be approved by the Charter Township of Oxford Fire Chief and the Road Commission for Oakland County.

2. Road name signage shall be erected by the Road Commission for Oakland County, at the applicant's expense.

11.4 Review and Approval Process.

A. Filing of Application. To initiate review of a proposed private road, the applicant shall submit sufficient copies of the required materials as specified in Section 11.4(B), below, to the Zoning Official.

B. Submittal Requirements. All private road applications shall include the following plans and documents, and shall comply with the following application requirements:

1. Completed and signed application form. The application for approval of a private road shall be accompanied by a completed and signed application form; however, private roads proposed as part of a site plan or planned unit development (pursuant to Articles 12 or 14, respectively) shall not require a separate application. The application shall be signed by the applicant or agent thereof (in which case, it shall be accompanied by documentation that the person making the application is authorized to act on behalf of the applicant, and shall represent that the applicant is making the application on behalf of all persons having an interest in the proposed private road area, including mortgage holders and land contract vendors. The application shall be signed by all persons with legal or equitable title to any lot to be served by the private road.

2. Private road plan. The private road plan shall be drawn and sealed by a professional engineer or land surveyor registered in the State of Michigan. The scale shall not be less than one inch equals 50 feet. The following information shall be provided on the plan:

a. A legal description of each lot to be served by the private road, a legal description of the private road easement, and the names and addresses of all persons or parties owning an interest in the title to the lots and the private road easement, including mortgage holders and land contract vendors.

b. A survey drawing describing the outline of the proposed private road easement with the dimensions and bearings thereof.

c. The proposed road name.

d. A topographical survey, shown in one-foot contour intervals, of the proposed private road easement and all adjacent land within one hundred (100) feet of the proposed private road easement; or within such greater area as may be necessary, in the judgment of the Township Engineer, to determine what construction methods will be adequate to ensure proper drainage, detention or retention of storm water.

e. A description of the natural features, including soils, wetlands, trees in excess of eight (8) inches in diameter, streams, watercourses, lakes, ponds and existing drains within the proposed private road easement, and within one hundred (100) feet of the proposed private road easement, or within such greater area as may be necessary, in the judgment of the Township Engineer, to determine what drainage and construction methods will be adequate.

f. The location of existing structures on properties within 100 feet of the proposed private road easement.

g. Plan and profile drawings and cross-sections clearly detailing all materials, grades, and dimensions of improvements proposed within the private road easement, prepared by a civil engineer registered in the State of Michigan, and bearing the seal of the same. These plans and drawings shall include the finish floor elevations of any existing or proposed buildings, as well as the dimensions of proposed driveway culverts, if necessary.

h. Details of proposed road drainage, and if necessary, proposed stormwater detention or retention systems.

i. Location of existing and anticipated utility lines, including, where applicable, electric, telephone, gas, cable television, water and sewer lines.

j. Other information deemed necessary by the Township to make the determination required by this Article, including, but not limited to, those items required under Section 12.3(C) for Final Site Plan submittals.

3. Private road easement agreement. A private road easement agreement shall be submitted in a recordable form which meets the minimum standards set forth in Section 11.5 of this Article.

4. Private road maintenance agreement. A private road maintenance agreement shall be submitted in a recordable form which meets the minimum standards set forth in Section 11.6 of this Article.

5. Public road agency approval. The location of the proposed private road connection to the existing public roadway shall be approved by the Road Commission for Oakland County (RCOC) or the Michigan Department of Transportation (MDOT), as applicable. Evidence of such RCOC or MDOT approval shall be provided in the application submittal, in the form of an approved application for a permit from the appropriate road agency. This requirement shall not be construed to necessitate construction permit approval by these agencies prior to Township approval of the private road.

6. Fee. The application shall be accompanied by an application fee as established by resolution of the Township Board.

C. Procedures.

1. Consultant Review. Upon receipt, the Zoning Official shall forward the private road application and related plans and materials to the Township Planner, Township Engineer, Township Attorney, Fire Department and any other appropriate departments or persons for review. Such review shall consider compliance with this Article, sound planning and engineering principles and any other applicable ordinances. The Township Attorney shall review all private road easement and maintenance agreements. All reviews and recommendations shall be forwarded in writing to the Planning Commission.

2. Planning Commission Review and Determination. The Planning Commission shall review all private road applications, plans and other required materials, along with all consultant reviews and recommendations, and either approve, approve with conditions, postpone or deny the proposed private road. The Planning Commission shall consider compliance with this Article, the Charter Township of Oxford Design Standards and Construction Specifications, and any other applicable ordinances. The Planning Commission

may postpone action on any application which does not contain all of the information required under Section 11.4(B). In the case of a private road proposed as part of a site plan or planned unit development (pursuant to Articles 12 or 14, respectively) the Planning Commission may take action on both the site plan or PUD and the private road component simultaneously.

3. Recording of Easement and Maintenance Agreement. Upon approval by the Planning Commission, the approved private road easement agreement and maintenance agreement shall be recorded by the applicant at the office of the Oakland County Register of Deeds, and proof of such recording shall be submitted to the Township before construction may commence.

4. Conformance with Land Improvement Ordinance (No. 108A). Following approval of the private road by the Planning Commission and recording of the easement and maintenance agreement, all relevant provisions of the Charter Township of Oxford Land Improvement Ordinance (No. 108A) shall be complied with before construction may commence.

D. Expiration of Approval. If construction has not commenced within 12 months of Planning Commission approval of the proposed private road, or if construction has not been substantially completed within 12 months after issuance of a Construction Permit, the private road approval shall become null and void, and a new application shall be required. Prior to the expiration of said private road approval, the applicant may apply in writing to the Planning Commission for an extension of a private road approval of up to twelve (12) months. The Planning Commission may grant an extension if it finds that the approved site plan adequately represents current conditions and conforms to current ordinance standards. The Township Board may levy upon the performance guarantee deposited by the applicant pursuant to the Land Improvement Ordinance (No. 108A) and complete the private road at the Applicant's complete and sole expense. Any outstanding costs over and above the amount of surety to complete construction of a private road due to the Applicant's actions shall become a lien on the land of all the lots served by the private road. Upon payment of the outstanding costs, the Township shall discharge all liens.

11.5 Private Road Easement Agreements. A private road easement agreement in recordable form shall be required for all private roads. Such agreement shall meet the following minimum requirements:

A. Legal description. A detailed legal description of the private road easement shall be submitted with the private road permit application.

B. Dedication. The Private Road Easement Agreement shall specify those adjoining properties which are entitled to be accessed via the private road. If a parcel adjoining said private road easement is not to be served by said right-of-way, then the Private Road Easement Agreement shall specifically provide for that exclusion, and said adjoining property owner shall not share in the ownership of the right-of-way.

C. Emergency and public vehicle access. The easement shall provide for unrestricted access for emergency and public vehicles used in performance of necessary public services.

D. Stormwater management easements. The Private Road Easement Agreement shall include all easements necessary to permit the operation and maintenance of necessary stormwater management facilities.

E. Public utility easements. The Private Road Easement Agreement shall include an easement granted to the Charter Township of Oxford for the purposes of constructing, operating, inspecting, maintaining, repairing, altering, replacing, and/or removing pipelines, mains, conduits and other installations of a similar character for the purpose of providing public utilities, including conveyance of sewage, water and storm water runoff across, through and under the property subject to said easement, and excavating and refilling ditches and trenches necessary for the location of said structures.

F. Noninterference. The terms of the easement agreement shall prohibit any property owner served by the road from restricting or interfering with the normal ingress and egress of other property owners, their families, guests, invitees, trades people and other persons traveling to or leaving any of the properties served by the private road.

G. Future connections. The terms of the easement agreement shall provide that the Township may require that future abutting private roads or public roads shall be connected to the existing private road.

H. Setback from existing structures. New private road easements shall be located to provide a sufficient distance from all existing conforming structures and legally nonconforming structures so that such structures comply with the front yard setback requirements for the zoning district in which they are located.

11.6 Private Road Maintenance Agreements. Continued maintenance of private roads and road drainage facilities shall be the responsibility of the property owners served by such roads. Prior to issuance of construction permits for the private road, such property owners shall enter into a legally-binding private road maintenance agreement, which shall contain the following:

A. Maintenance costs. The private road maintenance agreement shall acknowledge that the road surface and easement area are privately owned, and therefore, all construction and improvements within the easement will be contracted and paid for by the signatories to the agreement or their successors or assigns.

B. Method of apportioning maintenance costs. The Private Road Maintenance Agreement shall describe the method by which maintenance costs and costs of improvements will be apportioned among those properties accessing the private road.

C. Assessment. The private road maintenance agreement shall contain a provision to permit the Township Board to authorize the repair and/or maintenance of any private road which is not being maintained adequately to permit safe access by users and emergency vehicles, and to assess the cost of such repair and/or maintenance, including the costs of engineering and administration, to the signatories to the private road maintenance agreement on an equitable basis. The decision to authorize repair or maintenance of a private road shall be at the Township Board's sole discretion**.**

D. Township not responsible. The provisions of the private road maintenance agreement shall in no way be construed to obligate the Township to perform regular inspections of the easement area, or to provide necessary repairs or maintenance.

E. Maintenance needs. The private road maintenance agreement shall acknowledge the responsibility of the signatories to such agreement to maintain the surface grading and resurfacing at regular intervals; snow and ice removal; repair of potholes; maintenance of road drainage and stormwater management systems; maintenance of unobstructed vision at any intersection with another private road or a public road; annual dust control; and regular cutting of weeds and grass within the easement.

F. Continuing obligation. The private road maintenance agreement shall specify that the obligation to maintain the easement shall be an obligation running with the land to be served by the private road, and shall be binding upon the owners of such land and their heirs, successors and assigns.

11.7 Existing Nonconforming Roads. The issuance of building permits for the construction of new single-family residences, or building permits for any other type of use (other than single-family residential)**,** on a lot or parcel served by an existing private road that does not comply with the standards of this Article or the Charter Township of Oxford Design Standards and Construction Specifications shall be prohibited.

11.8 Extension of Existing Private Roads. Where an existing private road is proposed to be extended, such extension shall be approved only if the existing private road is brought up to the standards of this Article and the Charter Township of Oxford Design Standards and Construction Specifications. Further, the applicant for such an extension shall obtain written consent from all parties having either an ownership interest in the existing private road easement, or a right to access their property therefrom. Evidence of such written consent shall be submitted to the Building Department in addition to those items required under Section 11.4(B). Such consent shall provide:

A. That the consenting party consents to the extension of the roadway pursuant to the application; and,

B. That the consenting party consents to the following:

1. Upgrading of the existing roadway to the standards set forth herein;

2. Entering into any private road maintenance agreements required for the extended private road;

3. Deeding such easements or rights-of-way as are necessary to upgrade said road, where applicable.

The Zoning Board of Appeals shall not vary this requirement.

11.9 Variances and Appeals. Variances from the provisions of this Article, or appeals from decisions rendered pursuant to this Article, may be sought from the Zoning Board of Appeals pursuant to Article 17.

11.10 Fees. The Township Board shall determine a fee schedule for private road applications. The amount of such fee shall take into account the cost of the review, including any consultant reviews, required in this Article.

ARTICLE 12
SITE PLAN REVIEW

12.1 Purpose. It is the purpose of this Article to require site plan approval for certain, developments, buildings, structures, and uses that can be expected to have a significant impact on natural resources, traffic patterns, adjacent parcels and land uses, and on the character of future development. It is further the purpose of this Article to achieve, through site plan review, safe and convenient traffic movement, both within a site and in relation to access streets; harmonious relationships of buildings, structures, and uses, both within a site and with adjacent sites; safe and efficient provision of public and private utilities; and to conserve natural features and resources. It is also the purpose of this Article to delegate certain aspects of site plan review authority to the Planning Commission, within the standards and requirements set forth in this Article.

12.2 Site Plan Approval Required.

A. Site plan review and approval is required for all new construction, structural alteration, or substantial change in use (as determined by the Zoning Planning Commission) involving the following:

1. All principally-permitted uses in the RM, MHC, C-1, C-2, O, RO, I-1, I-2, and R zoning districts.

2. All special land uses.

3. Any other use for which the establishment of an off-street parking lot is required.

4. Any condominium project, including building condominiums, site condominiums, and condominium conversions.

B. The Building Official shall not issue a building permit for the construction of, or addition to, any of the above listed developments, until a Final Site Plan has been reviewed and approved by the Planning Commission pursuant to Section 12.3(C).

C. Single-family dwellings (and accessory buildings thereto) and farm operations shall be exempt from the site plan approval requirements contained in this Article. Essential services shall also be exempt from these site plan approval requirements, to the extent provided under Section 6.8.

D. No grading, removal of trees or other vegetation, land filling, or construction of improvements shall commence for any development which requires site plan approval, until a Final Site Plan is approved and is in effect.

12.3 Review and Approval Procedures. The procedure for processing site plans includes three (3) phases: a pre-application conference, Preliminary Site Plan review and Final Site Plan approval.

A. Pre-application Conference. Prior to the submission of an application for Site Plan approval, a pre-application conference shall be held at a regularly-scheduled or special meeting of the Planning Commission. The purpose of this conference shall be to address the site plan review process and informational requirements, as outlined in this Section, and shall not constitute any form of official review or approval of the site plan project. Nor shall this conference in any way circumvent, replace, or supersede the review and approval powers of the Planning Commission regarding the site plan application. For the pre-application conference, the applicant shall, at minimum, present a sketch plan of the proposed project, including the following information:

1. Total size of the project.

2. A statement of the number of residential units, if any.

3. The number and type of non-residential uses.

4. The size of the area to be occupied by each type of use.

5. The known deviations from ordinance regulations to be sought.

6. The number of acres to be preserved as open or recreational space.

7. All known natural or historic features to be preserved.

8. Anticipated demand for public sanitary sewer and water service.

9. The extent of known soil or groundwater contamination on the site.

B. Preliminary Site Plan. Following the pre-application conference, the applicant shall submit a Preliminary Site Plan and application for the proposed project. The purpose of such preliminary review is to evaluate compliance with Township ordinances and other federal, state and county laws and regulations, and to identify changes that may be necessary prior to Final Site Plan approval.

1. Submittal. To initiate the Preliminary Site Plan review process, the applicant shall submit sufficient copies of the materials required under Section 12.3(B)(2), below, to the Zoning Official.

2. Information Required. Every Preliminary Site Plan submitted for review under this Section shall contain all of the following data for

review and approval. Submittals shall be made in both digital and paper formats. The contents of digital and paper submittals shall be identical to one another. Digital submittals shall be provided in PDF file format on CD-RW or other media currently acceptable to the Zoning Official. Paper submittals shall be provided with a sheet size of at least 24" x 36". The scale of all plan view drawings shall be a maximum of 1" = 50' for property less than five (5) acres, or a maximum of 1" = 100' for property five (5) or more acres. Included on the Preliminary Site Plan shall be all relevant dimensions and the following information, except where specifically waived by the Planning Commission:

a. General Information.

i. Proprietors', applicants', and owners' names, addresses and telephone numbers.

ii. Date (month, day, year), including revisions.

iii. Title block.

iv. Scale.

v. Northpoint.

vi. Legal description and certified survey.

vii. Location map drawn at an acceptable scale with north point and indicating the proximity of the site to major roads and intersections.

viii. The seal of an Architect, Engineer, Surveyor, Landscape Architect, or Planner licensed in the State of Michigan.

ix. Existing lot lines, building lines, structures, parking areas, etc., on the parcel, and within one hundred (100) feet of the site.

x. Proposed lot lines, property lines and all structures, parking areas, etc. within the site, and within one hundred (100) feet of the site.

xi. Centerline and existing and proposed right-of-way lines of any street.

xii. Zoning classification and land use of petitioner's parcel and all abutting parcels.

xiii. Gross and net lot area figures.

xiv. A map or figure illustrating the distance of the site from major thoroughfares and section corners.

xv. Evidence of public water and sewer capacity allocation from the Building Official.

b. Physical Features.

i. Acceleration, deceleration and passing lanes and approaches.

ii. Proposed locations of roadways, access drives, driveway locations, sidewalks, safety paths, curbing and areas for public use.

iii. Traffic Impact Study, where required pursuant to Section 8.4(B).

iv. Location of existing and proposed service facilities above and below ground, including:

- Well sites.
- Septic systems and other wastewater treatment systems. The location of the septic tank and the primary and reserve drain fields (soil absorption system) should be clearly distinguished.
- Water main systems, hydrants, pump houses, standpipes and building.
- Sanitary sewers and pumping stations.
- Storm water management systems and structures including storm sewers, swales, retention and detention basins, drainage ways and other facilities, including preliminary calculations for sizes.
- Chemical and fuel storage tanks and containers.
- Storage, loading, and disposal areas for chemicals, hazardous substances, salt and fuels.

- Location of all easements.

v. All structures, including typical floor plans with dimensions, setback and yard dimensions**,** and typical elevation views.

vi. Dimensioned parking spaces and calculations pursuant to Section 8.6, drives and method of surfacing.

vii. Conceptual illustration of existing and proposed landscaping, berms, fencing and walls.

viii. Trash receptacle pad/enclosure location.

ix. Transformer pad location.

x. Dedicated road or service drive locations.

xi. Designation of fire lanes.

xii. Historic structures as identified by the State of Michigan and/or national registry of historic places pursuant to U.S. Department of the Interior.

xiii. Any other physical features having a substantial impact on the site.

c. Natural Features.

i. Soil characteristics of the parcel to at least the detail provided by the U.S. Soil Conservation Service "Soil Survey of Oakland County, Michigan".

ii. Existing topography with a maximum contour interval of two (2) feet. Topography on the site and beyond the site for a distance of one hundred (100) feet in all directions should be indicated.

iii. Conceptual grading plan utilizing, at minimum, spot elevations and directional arrows to illustrate anticipated cutting, filing and grading.

iv. Location of existing drainage courses and associated bodies of water, on and off site, and their elevations.

v. Location of all existing wetlands, as defined in the Townships' Wetlands Ordinance, Ordinance No. 80B.

vi. Location of 100-year floodplain areas, as certified by a licensed engineer using acceptable engineering practice, subject to review by the Township and the Michigan Department of Environmental Quality (MDEQ).

vii. The location of trees and wooded areas found on the property.

viii. Listing of rare or endangered species of flora or fauna, as available from the State of Michigan, the Michigan Natural Feature Inventory (MNFI).

d. Additional Requirements for Residential Developments.

i. Designation of units by type and number of units in each building.

ii. Density of dwelling units per acre, based upon the net lot area, broken down by unit type**.**

iii. Density of bedrooms per acre, based upon the net lot area, for multiple-family residential projects.

iv. Location of carports, where proposed.

v. Specific amount of recreational facilities and the acreage and location of recreation spaces.

e. Additional Requirements for Commercial and Industrial Developments.

i. Loading/unloading areas.

ii. Total and usable floor area.

iii. Number of employees in peak usage.

iv. Nature of anticipated tenants.

f. Additional Requirements for Site Condominium Developments. In addition to the information required elsewhere in this Section for Preliminary Site Plan submittals, all information required under Sections 402(1)(B), (C), and (D) of the Charter Township of Oxford's Land Division Regulations Ordinance (Ord. No. 103) shall be provided where a site condominium project is proposed.

3. Planning Commission Action. The Planning Commission shall review the Preliminary Site Plan and shall take one of the following actions:

   a. Approval. Upon finding that the Criteria for Site Plan Review set forth in Section 12.5 are satisfied by the Preliminary Site Plan, the Planning Commission shall approve the Preliminary Site Plan.

   b. Approval with Changes or Conditions. The Planning Commission may grant conditional approval of the Preliminary Site Plan, subject to modifications to be performed by the applicant.

   c. Postponement. Upon finding that the Criteria for Site Plan Review set forth in Section 12.5 are not satisfied by the Preliminary Site Plan, but could be if the plans were revised or further documentation was submitted, the Planning Commission may postpone action on the proposal until a revised Preliminary Site Plan is submitted. Upon making such action, the Planning Commission shall determine whether resubmittals made pursuant to a postponement shall be reviewed by Township consultants, or be returned to the Planning Commission without further review by Township consultants. Resubmittal pursuant to a postponement shall be made within 365 days from the date of postponement or the application shall be void.

   d. Denial. Upon finding that the Preliminary Site Plan does not and/or will not meet the Site Plan Approval Criteria set forth in Section 12.5, the Planning Commission shall deny the Preliminary Site Plan.

4. Effect of Approval. Approval of a Preliminary Site Plan allows the applicant to submit a Final Site Plan for review and approval pursuant to Section 12.3(C). Preliminary Site Plan approval shall expire and be of no effect after three hundred sixty-five (365) days following approval by the Planning Commission.

C. Final Site Plan Review. Following Planning Commission approval of the Preliminary Site Plan, the applicant shall submit a Final Site Plan and application for the proposed project.

1. Submittal. To initiate the Final Site Plan review process, the applicant shall submit sufficient copies of the materials required under Section 12.3(C)(2), below, to the Zoning Official.

If a Final Site Plan is not submitted by the applicant for approval within 365 days of Preliminary Site Plan approval by the Planning Commission, the Preliminary Site Plan approval becomes null and void.

2. Information Required. Every Final Site Plan submitted for review under this Article shall contain all of the following data prior to its submission to the Planning Commission for review and approval. Submittals shall be made in both digital and paper formats. The contents of digital and paper submittals shall be identical to one another. Digital submittals shall be provided in PDF file format on CD-RW or other media currently acceptable to the Zoning Official. Paper submittals shall be provided with a sheet size of at least 24" x 36". The scale of all plan view drawings shall be a maximum of 1" = 50' for property less than five (5) acres, or a maximum of 1" = 100' for property five (5) or more acres. Included on the Final Site Plan shall be all relevant dimensions and the following information, except where specifically waived by the Planning Commission:

   a. All information required under Section 12.3(B)(2).

   b. Final grading plan, showing finished contours at a maximum interval of two (2) feet, correlated with existing contours so as to clearly indicate required cutting, filing and grading.

   c. Dimensioned floor plans and elevation views of all proposed buildings and structures, including proposed building materials and colors.

   d. Detailed lighting plan(s) illustrating all information required under Section 10.2(D).

   e. Detailed landscape plan(s) illustrating all information required under Section 7.9.

   f. Details of proposed trash receptacle and transformer pad screening.

   g. Signage details, including all information required under Section 9.11(B), if approval of proposed signs is desired as part of site plan approval.

   h. Details of proposed recreation facilities to be provided, including play structures, benches, and the like.

   i. Parking Easement Agreement(s) for off-site parking areas pursuant to Section 8.5(C).

j. Collective Parking Agreements for shared parking areas pursuant to Section 8.5(I)(2).

k. Where any condominium project is proposed, the following additional items shall be provided:

i. All information required by Section 66 of the Condominium Act (P.A. 59 of 1978).

ii. Draft Master Deed and Bylaws, prepared pursuant to Section 13.8.

3. Planning Commission Action. The Planning Commission shall review the Final Site Plan and shall take one of the following actions:

a. Approval. Upon finding that the Application and Site Plan meet the Criteria of Site Plan Review in Section 12.5, the Planning Commission shall approve the site plan.

b. Approval with Changes or Conditions. Upon finding that the Application and Site Plan meet the Criteria of Site Plan Review in Section 12.5, except for minor revisions, the Planning Commission may approve the site plan conditioned upon said revisions being made by the applicant and reviewed by appropriate Township staff and/or consultants.

c. Postponement. Upon finding that the Application and Site Plan do not meet the Criteria of Site a Plan Review in Section 12.5, but could upon the making of revisions or submittal of further documentation, the Planning Commission may postpone action until the revised Plan is resubmitted. Upon making such action, the Planning Commission shall determine whether resubmittals made pursuant to a postponement shall be reviewed by Township consultants, or be returned to the Planning Commission without further review by Township consultants. Resubmittal pursuant to a postponement shall be made within 365 days from the date of postponement or the application shall be void.

d. Denial. Upon finding that the Application and Site Plan do not meet one (1) or more of the Criteria of Site Plan Review in Section 12.5, and that revisions necessary to meet said Criteria are so extensive as to require the preparation of a new Site Plan, the Planning Commission shall deny the site plan.

4. Filing of Approved Site Plan. Upon approval of the Final Site Plan, the applicant and/or owner(s) of record, and the Planning Commis-

sion Chair or his/her designee, shall sign five (5) copies of the approved plan, and shall transmit one (1) such signed copy of the approved Final Site Plan each to the Building Official, Zoning Administrator, Township Clerk, and to the applicant. One (1) such copy shall be retained in the Planning Commission files.

5. Effect of Approval. Approval of a Final Site Plan authorizes issuance of a building permit pursuant to Section 16.4 or, in the case of uses without buildings or structures, issuance of a zoning compliance permit pursuant to Section 16.3, provided that all conditions of Final Site Plan approval have been satisfied. Approval shall expire and be of no effect after three hundred sixty-five (365) days following approval by the Planning Commission, unless a building permit, when required, is applied for and granted within that time period, and construction has begun and is being diligently pursued to completion.

D. Concurrent Preliminary and Final Site Plan Review. Projects of limited scope, intensity or complexity may pursue Preliminary and Final Site Plan approval concurrently, at determined by the Planning Commission. Such determination shall be made at the time of the Pre-Application Conference required under Section 12.3(A).

12.4 Administrative Review and Approval Procedures for Minor Site Plans and Minor Site Plan Amendments. The Zoning Administrator is hereby authorized to conduct administrative review of minor site plans, evaluating such plans for approval, conditional approval, referral to Planning Commission or denial, upon consultation with the chair of the Planning Commission, the Township Engineer and the Township Planner. These minor site plans (or minor site plan amendments) shall be subject to all other site plan criteria, requirements and standards as included in this Article.

A. A minor site plan (or minor site plan amendment) may be applied for in any of the following cases:

1. Accessory uses incidental to a conforming existing use where said use does not require any variance, or site modifications;

2. Expansions and/or additions to existing conforming structures or addition of principle buildings and accessory buildings less than two thousand (2,000) square feet or not more than ten (10) percent of the existing floor area, whichever is less.

3. Provision for additional parking, loading/unloading spaces and landscape improvements as required by Ordinance.

B. At the direction of the Zoning Administrator, any information required for Final Site Plan approval in Section 12.3(C)(2) may be required for admin-

istrative site plan approval. However, at a minimum, submissions for administrative site plan approval shall include the following information:

1. Proprietors', applicants, and owners names, addresses and telephone numbers.

2. Date (month, day, year), including revisions.

3. Title Block and Scale.

4. Northpoint.

5. Proposed and existing structures, parking areas, etc. on the parcel, and within one hundred (100) feet of the parcel.

C. The Zoning Administrator shall consider the criteria set forth in Section 12.5 in the review of the site plans submitted under this Section.

12.5 Criteria for Site Plan Review. Site Plans shall be reviewed and approved upon a finding that the following criteria are met:

A. The proposed use will not be injurious to the general health, safety and welfare of the Township and surrounding neighborhood.

B. The location of buildings, outside storage receptacles, parking areas, screen walls and utility areas is such that the adverse effects of such uses will be minimized for the occupants of that use and surrounding areas.

C. The design of stormwater management systems, roads, parking lots driveways, water mains, sanitary sewer systems and other site improvements meets the design and construction standards of the Township and other appropriate agencies.

D. Proper access to all portions of the site and all sides of any structure is provided. All structures or groups of structures shall be so arranged as to permit emergency vehicle access by some practical means to all sides. Site features such as, but not limited to, trees and other plant materials, fences, retaining walls, berms, outdoor furniture, outdoor structures, and natural and artificial water bodies shall be arranged to permit adequate emergency vehicle access.

E. Site planning and design of specific improvements will accomplish the preservation and protection of existing natural resources and features such as lakes, ponds, streams, wetlands, floodplains, steep slopes, groundwater, trees, and wooded areas, including understory trees.

F. The proposed development respects the natural topography to the maximum extent possible by minimizing the amount of cutting, filling and grading required.

G. The proposed development will not cause soil erosion or sedimentation. The drainage plan is adequate to handle anticipated stormwater runoff.

H. A stormwater management system and facility will preserve the natural drainage characteristics and enhance the aesthetics of the site to the maximum extent possible, and will not substantially reduce or increase the natural retention or storage capacity of any wetland, water body or water course, or cause alterations which could increase flooding or water pollution on or off site.

I. Wastewater treatment systems, including on-site septic systems, will be located to minimize any potential degradation of surface water or ground water quality.

J. Sites which include storage of hazardous materials waste, fuels, salt, or chemicals shall be designed to prevent spills and discharges of polluting materials to the surface of the air or to the ground, groundwater or nearby water bodies, with a specific plan to achieve such objectives being incorporated as part of the site plan.

K. The location of buildings, parking, drives, landscaping and other improvements on the site shall not be injurious to users of the property or adjacent properties given the lot size, shape and general location.

L. Landscaping, including grass, trees, shrubs and other vegetation is provided to maintain and improve the aesthetic quality of the site and area.

M. The means of ingress and egress to and from the site shall be planned with the objective of achieving recognized planning, engineering and safety standards, and shall not result in an unreasonable risk of danger to persons and/or property on the site and/or off the site. In general, this standard shall be met based upon the design of ingress and egress in terms of the number, location and design of access(es), and utilization of acceleration, deceleration and passing lanes and approaches. The Planning Commission shall review the ingress and egress proposed for the purpose of promoting and protecting traffic safety.

N. The site plan complies with all federal, state and county laws and regulations, and all Township Ordinances and other regulations, including but not limited to the Zoning Ordinance and the Sidewalk and Safety Path Ordinance (Ordinance No. 117).

O. Feedback on the proposed site plan from external agencies having authority over the project, including but not limited to the Road Commission for

Oakland County, Oakland County Drain Commissioner, Oakland County Department of Health and Human Services, Michigan Department of Environmental Quality and the Michigan Department of Transportation, is sufficient to suggest that the site plan will be able to meet their requirements and be approved substantially as presented.

12.6 Amendment of Approved Site Plans. Except as provided for in Section 12.4, a site plan may be amended upon application and in accordance with provisions and the procedures provided in Section 12.3(C) for a Final Site Plan. Site plans amended in order to be brought into compliance with the requirements of governmental agencies of authority, other than the Charter Township of Oxford, are subject to the provisions of this ordinance. The Zoning Administrator shall have the authority to determine if a proposed change is substantive and therefore requires an amendment to the approved site plan.

12.7 Modifications During Construction. All improvements shall conform to the approved Final Site Plan. If the applicant chooses to make any changes in the development in relation to the approved Final Site Plan, he shall do so at his own risk, without any assurance that the Township will approve the changes. It shall be the responsibility of the applicant to notify the Zoning Administrator of any such changes. The Zoning Administrator may require the applicant to correct the changes so as to conform to the approved Final Site Plan.

12.8 Phasing of Development. An applicant may divide a proposed development into two (2) or more phases with the approval of the Planning Commission. Where such phasing is proposed, each phase shall conform with Section 12.3(C)(5). Future phases of development beyond those for which site plan approval is requested shall not be depicted on the submitted Final Site Plan.

12.9 Performance Guarantees. Pursuant to Section 16.8, the Planning Commission may require that a performance guarantee be deposited with the Township to insure faithful completion of improvements depicted on a proposed site plan

ARTICLE 13
CONDOMINIUM REGULATIONS

13.1 Intent. This Article shall regulate the development of condominiums to promote the public health, safety and general welfare; to further the orderly layout and use of land; to require that land be suitable for building sites, public and private improvements and that there be adequate drainage thereof; to provide for proper ingress to and egress from buildings; to provide standards and a procedure for condominium approval, to insure that condominium developments meet the standards of this Ordinance, and, except where otherwise provided for in this Article, assure that site condominiums meet the standards and requirements of the Charter Township of Oxford Land Division Regulations Ordinance No. 103, as amended.

13.2 Applicability. The provisions of this Article shall apply to all condominium projects authorized under the Condominium Act (P.A. 59 of 1978), including contractible, expandable and conversion condominiums and mobile home condominium projects.

13.3 Definitions. The following terms, phrases, words and their derivatives shall have the meaning given in Article 2 of this Ordinance or the Condominium Act (P.A. 59 of 1978) itself, unless the context otherwise requires:

Building Condominium	Co-Owner
Condominium Documents	Expandable Condominium
Condominium Project	General Common Elements
Condominium Subdivision Plan	Limited Common Elements
Condominium Unit	Master Deed
Contractable Condominium	Mobile Home Condominium Project
Conversion Condominium	Site Condominium
Convertible Area	Site Condominium Lot

13.4 Building Condominiums. No permits for erosion control, grading, utility installation, paving, building construction or the installation of any other improvements shall be issued for property in a condominium development until a Final Site Plan and associated master deed has been approved by the Planning Commission. The requirements of this Section shall include contractible, expandable and conversion building condominiums. In addition to the review and approval provisions of Article 12, the following standards shall apply to building condominiums:

A. Internal Vehicular Circulation System. Internal vehicular circulation systems provided in building condominium projects, including drives, parking lots and loading areas, shall conform to the requirements of Article 11, Private Roads, except that deviations in the geometry of proposed paved area and easement are permissible, subject to a determination of adequate circulation by the Police and Fire Departments. In the case of internal circulation systems serving building condominium projects, the "private road easement" required by Article 11 shall not apply for the calculation of setbacks or the determination of required road frontage.

B. Detached Single-Family Residential Development Prohibited**.** The development of detached single-family residential units shall not be done as a building condominium.

13.5 Site Condominiums. No permits for erosion control, grading, utility installation, paving, building construction or the installation of any other improvements shall be issued for property in a site condominium development until a Final Site Plan and associated master deed has been approved by the Planning Commission. This requirement shall include contractible and expandable site condominiums.

A. Review and Approval Procedures. Site condominium projects shall be reviewed and approved in accordance with Article 12, Site Plan Review, except that actions taken by the Planning Commission to approve, approve with conditions, or deny a Preliminary and Final Site Plans for site condominium projects shall be treated as recommendations to the Township Board, who shall have final authority to approve or deny such plans.

B. General Requirements.

1. Internal Road System. Where public roads are proposed to provide access to site condominium lots, they shall conform to the standards of the Road Commission for Oakland County. Where private roads are proposed, they shall conform to the requirements of Article 11, Private Roads. In the case of internal roads serving site condominium projects, the "private road easement" required by Article 11 shall be used for the purposes of calculating setbacks and determining required road frontage.

2. Site Condominium Lots. Each site condominium lot shall be considered equivalent to a single lot and shall comply with all regulations of the zoning district in which it is located. Not more than one (1) principal building shall be located on a site condominium lot, nor shall a principal building be located on a site condominium lot with any other principal structure or use except in a PUD district. Required yards shall be measured from the boundaries of a site condominium lot. Lot coverage and floor area ratio shall be calculated using the land area of the site condominium lot.

3. Relation to the Land Division Regulations Ordinance. The provisions of Articles 500 and 600 of the Township's Land Division Regulations Ordinance (No. 103) shall apply to site condominiums and are incorporated herein by reference. In applying the "Design Layout Standards" of Article 500 and the "Improvements" requirements of Article 600, the standards and requirements that are intended to apply to lots in a subdivision shall apply instead to site condominium lots. Nothing in this Section shall be construed as requiring a site condominium to obtain plat approval under the Charter Township of Oxford Land Division Ordinance (No. 103) or the Land Division Act.

4. Road Rights-of-Way or Easements. Road rights-of-way or easements shall be described separately from individual site condominium lots, and shall be accurately delineated by bearings and distances on the condominium subdivision plan and final site plan. The right-of-way shall be for roadway and other transportation purposes and for the purposes of locating, installing, maintaining, and replacing of public utilities. The developer shall dedicate easements to the Township for all necessary public services.

5. Water and Sanitary Service. Each condominium lot shall be connected to water supply and sanitary sewer facilities when available, or shall have a well, septic tank, and drain field approved by the Oakland County Environmental Health Division where water and sanitary sewer services are not available. The well, septic tank and drain field serving a condominium unit shall be located within that unit, as described in the master deed, except in a PUD district, in which case this requirement may be waived by the Township Board as a part of its approval of the PUD district rezoning petition.

13.6 Projects Having Both Building and Site Condominium Units. Combinations of building and site condominium units shall not be included within a single condominium project. Where an overall development will contain both building condominium units and site condominium units, each respective type of unit shall be subject to their respective regulations, and shall be governed by separate master deeds.

13.7 Conversion Condominiums. Conversion condominium projects shall be subject to the review and approval provisions of Article 12 and the following provisions:

A. Conformance with Original Site Plan. Prior to the approval of a conversion condominium project, conformance with the original site plan approval (as well as any amendments thereto) for the existing development shall be re-

quired**,** where such was required prior to the existing development and the original site plan remains on file with the Township.

B. Outstanding Ordinance Violations. All outstanding violations of this Ordinance shall be addressed prior to the approval of a conversion condominium project.

C. Nonconformities. Legal nonconformities associated with existing development that is proposed for condominium conversion may continue to exist as part of an approved conversion condominium project, in accordance with Article 15, unless they pose a significant public health, safety, and/or welfare concern.

D. Submittal Requirements.

1. All materials required under Sections 12.3(B)(2) and 12.3(C)(2) for Preliminary and Final Site Plan approval, respectively, shall be submitted for the review of proposed conversion condominium projects, except as deemed unnecessary by the Planning Commission. At minimum, a master deed meeting the requirements of Section 13.8 shall be provided for review and approval.

2. Where detailed architectural plans and specifications for the existing buildings and structures are not available, the developer of a conversion condominium project shall submit an affidavit to the Township stating such.

13.8 Standards for Master Deeds. The master deed (and exhibits) associated with a condominium project proposed pursuant to this Article shall adhere to the following provisions:

A. Required Provisions. Master deeds submitted for approval of any condominium project pursuant to this Article shall include all items required under Sections 8, 31, 32, 33 and 54 of the Condominium Act (P.A. 59 of 1978), as applicable, as well as the following:

1. Description of all easements, including but not limited to:

a. Public road right-of-way or private road easements;

b. Easements for water systems, sanitary sewer systems, stormwater management systems and franchise utilities.

i. In site condominium projects, such easements shall be provided as set forth in the Charter Township of Oxford Land Division Ordinance (No. 103);

ii. In building or conversion condominium projects, such easements shall be provided as “blanket easements” covering the entire condominium project except unit areas and designated common areas.

2. Provisions to ensure the maintenance of all roads, utilities and stormwater management facilities.

3. A provision indicating that any future changes made to the master deed must be approved by Planning Commission pursuant to Section 13.9(I).

4. A provision requiring that all aspects of the development, operation and maintenance of the condominium project shall be subject to all Township ordinances.

5. A provision indicating the time or circumstance by which all responsibilities of the developer transfer to the Condominium Association.

B. Prohibitions. Provisions contained within a proposed master deed shall not cause or require any of the following:

1. Contradiction with any requirement of the Condominium Act (P.A. 59 of 1978);

2. Violation of Township, County, State or Federal laws and regulations;

3. Impairment of the public health, safety or welfare;

4. Impairment of the effective operation of the Condominium Association it establishes.

13.9 Additional Requirements for Condominium Projects.

A. Information Required Prior to Building Permit Issuance. Prior to the issuance of building permits for any condominium units, the applicant shall submit the following to the Zoning Official:

1. A copy of the master deed (including exhibits), as recorded with the Oakland County Register of Deeds.

2. A copy of any restrictive covenants, as recorded with the Oakland County Register of Deeds.

3. Evidence of completion of improvements associated with the site condominium project, including two (2) dimensionally-stable copies of the record drawings, to be approved by the Township Engineer.

B. Information to Be Kept Current. Until applicable certificates of occupancy have been issued, all information required by this Ordinance shall be kept current and furnished to the Zoning Official.

C. Mobile Home Condominium Projects. Mobile home condominium projects shall conform to all requirements of this Ordinance and shall be located only in Manufactured Housing Community (MHC) zoning districts.

D. Compliance with Township Standards. All proposed improvements in a condominium shall comply with the current edition of the Charter Township of Oxford Design Standards and Construction Specifications Manual.

E. Encroachment Prohibited. Encroachment of one condominium lot upon another as described in Section 40 of the Condominium Act (P.A. 59 of 1978) shall be prohibited in the master deed. In addition, no common elements shall be permitted within the limited common elements of an individual condominium lot.

F. Relocation of Condominium Unit Boundaries. Relocation of boundaries between adjoining condominium units, if permitted in the master deed, as provided in Section 48 of the Condominium Act (P.A. 59 of 1978), shall comply with all regulations of the zoning district in which they are located, and shall be approved by the Zoning Administrator. These requirements shall be made a part of the bylaws and recorded as part of the master deed.

G. Division of Condominium Units. Each condominium unit that results from a subdivision of another condominium unit, if such subdivision is permitted by the master deed, as provided in Section 49 of the Condominium Act (P.A. 59 of 1978), shall comply with all regulations of the zoning district in which they are located, and shall be approved by the Zoning Administrator. These requirements shall be made a part of the condominium bylaws and recorded as part of the master deed.

H. Revision of Condominium Subdivision Plan. If the condominium subdivision plan is revised, the Final Site Plan shall be revised accordingly and submitted for review to the Planning Commission pursuant to Section 12.3(C). The Planning Commission shall approve the revised Final Site Plan before a building or land improvement permits may be issued, where such permits are required.

I. Amendment of Master Deed or Bylaws. Any amendment to a master deed that affects the approved Final Site Plan, or any conditions of approval of the Final Site Plan, shall be reviewed and approved by Planning Commission. The Planning Commission must approve any amendment of

the master deed before any building permit may be issued, where such permit is required. The Planning Commission may require its review of an amended condominium plan if, in its opinion, such changes in the master deed or bylaws require corresponding changes in the approved condominium plan.

J. Construction in a General Common Element. Any application for a building permit for construction to be located in a general common element shall include written authorization from the Condominium Association.

ARTICLE 14
PLANNED UNIT DEVELOPMENT (PUD)

14.1 Intent. A Planned Unit Development (PUD) may be applied for in any zoning district. The granting of PUD approval (pursuant to Section 14.6) shall constitute both site plan and rezoning approval, in which the resultant zoning is tied to the details contained in the accompanying site plan in addition to any other conditions attached to the PUD approval by the Township.

It is the intent of this Article to authorize the use of Planned Unit Development (PUD) regulations as an alternative to traditional development for the purposes of encouraging the use of land in accordance with its character and adaptability; conserving natural resources, natural features and energy; encouraging innovation and greater flexibility in land use planning and design; providing enhanced housing, employment, shopping, traffic circulation, farmland preservation, and recreational opportunities for the people of this Township; encouraging a less sprawling form of development; and ensuring compatibility of design and use between neighboring properties. The PUD is designed to give the Township and applicant more flexibility than would be allowed under the existing zoning, encouraging development of the property according to its unique characteristics.

The provisions of this Article are not intended as a device for ignoring the Zoning Ordinance and specific standards set forth therein, or the planning upon which it has been based. To that end, provisions of this Article are intended to result in land use development substantially consistent with the existing zoning and existing Charter Township of Oxford Master Plan, with modifications and departures from generally applicable requirements made in accordance with standards provided in this Article to ensure appropriate, fair, and consistent decision-making. Requirements stated in this Article are development guidelines that the Planning Commission, Township Board and Township staff will use to determine the merits of a particular application. The Planning Commission may recommend variations from these guidelines when an applicant has demonstrated that doing so will result in a corresponding benefit to the community.

14.2 Eligibility Criteria. To be eligible for Planned Unit Development (PUD) approval, the applicant shall demonstrate that the following criteria will be met:

A. Recognizable Benefit. The PUD will result in a recognizable and substantial benefit, both to the end users of the development and the overall quality of life in the Township. These benefits can be provided through site design elements in excess of the requirements of this Ordinance, such as one or more of the following:

1. Preservation of natural features, specifically, but not limited to, woodlands, specimen trees, riparian systems, wetlands, open spaces and the connectivity thereof.

2. Improvements in traffic patterns, such as the provision of unified access or improvement of the adjacent road system.

3. Mitigation, remediation or restoration of disturbed areas or contaminated sites.

4. Improvements in the aesthetic qualities of the development itself, such as unique site design features and extensive landscaping.

5. Provision of pedestrian connectivity, via internal sidewalks, perimeter safety paths and other greenway corridors.

6. Improvements in public safety or welfare through better water supply, sewage disposal, stormwater management, or control of air and water pollution.

7. High quality architectural and landscape design.

8. Public amenities, such as plazas, parks, courtyards, water features, streetscape improvements, outdoor sculpture, clock towers, etc.

9. Provision of transitional areas between adjacent residential land uses.

10. Preservation of farmland.

11. Preservation of historic buildings.

Economic benefit to the community shall not, by itself, be deemed sufficient to allow eligibility, but may be considered in conjunction with the benefits listed above.

B. Density Impact. The proposed type, intensity or density of use shall not result in an unreasonable increase in the need for or impact to public services, facilities, roads, and utilities in relation to the use or uses otherwise permitted by this Ordinance, and shall not pose an unreasonable impact to the subject site; surrounding land, property owners and occupants; and/or the natural environment. The Planning Commission may require that the applicant prepare an impact statement documenting the significance of any environmental, traffic or socio-economic impacts resulting from the PUD. The potential impact of the proposed PUD project shall be evaluated in relation to the impacts associated with conventional development. To this end, the Planning Commission may require that the applicant prepare a quantitative comparison of the impacts of a conventional develop-

ment and the PUD plan to assist in making this determination (such as an overlay of the conceptual development plans on a natural features map, illustrating other site development options to demonstrate that the impacts have been minimized to the extent practical). If the cumulative impact creates or contributes to a significant problem relative to the provision of public services or environmental degradation, mitigation shall be provided to alleviate the impacts associated with the PUD.

C. Master Plan. The proposed development shall be consistent with the intent and spirit of the Charter Township of Oxford Master Plan, and further its implementation. If the proposed development is not consistent with the Master Plan but there has been a change in conditions in the area that will explain why the proposed PUD is a reasonable use of land, the Planning Commission can consider a deviation from the Master Plan concurrent with the review and approval of the proposed PUD, pursuant to the standards provided in Section 14.5(F).

D. Guaranteed Open Space. The proposed PUD shall include the perpetual preservation of usable open space in accordance with the provisions of Section 14.3(I).

E. Economic Impact. In relation to the existing zoning, the proposed development shall not result in an unreasonable material negative economic impact upon surrounding properties, as determined by the Planning Commission.

F. Unified Control. The proposed development shall be under single ownership and/or control, such that there is a single person or entity having proprietary responsibility for the full completion of the project. The applicant shall provide sufficient documentation of ownership or control in the form of agreements, contracts, covenants, and/or deed restrictions that indicate that the development will be completed in its entirety as proposed.

14.3 Project Design Standards.

A. Location. A PUD may be applied for within any zoning district.

B. Permitted Uses or Combination of Uses. A PUD is permitted for the following types of uses: single-family detached, attached residential dwellings, commercial uses, office uses, industrial uses and mixed-use projects containing some combination of the above stated land uses.

C. Special Uses. For all special uses, regulations applicable to each respective use shall apply. The Township Board, in its discretion, shall resolve all ambiguities as to applicable special land use regulations. Deviations with respect to regulations applicable to such special land uses may be granted as part of the overall approval of the PUD, provided there are features

or elements deemed adequate by the Township Board designed into the project plan for the purpose of achieving the objectives of this Article.

D. Base Zoning Regulations. Unless specifically waived or modified by the Planning Commission and Township Board, all Zoning Ordinance requirements for the underlying zoning district in existence upon application for PUD consideration, and other Township regulations, shall remain in full force.

E. Regulatory Flexibility. To encourage flexibility and creativity consistent with the PUD concept, the Planning Commission may recommend, and the Township Board may grant, specific departures from the dimensional, design or procedural requirements of the Zoning Ordinance as a part of the PUD approval process.

Any regulatory modifications shall be approved through findings by the Planning Commission and Township Board that the deviations shall result in a higher quality of development than would be possible using conventional zoning standards. Regulatory modifications are not subject to variance approval of the Zoning Board of Appeals. No part of a PUD plan may be appealed to the Zoning Board of Appeals. This provision shall not preclude the owner of an individual lot within a PUD from seeking a dimensional variance following final approval of the PUD, provided such variance does not involve alterations to the common elements as shown on the approved PUD site plan.

A table shall be provided on the site plan which specifically details all deviations from the established zoning area, height, and setback regulations, off-street parking regulations, general provisions, or subdivision regulations that would otherwise be applicable to the uses and development proposed in the absence of this PUD Article. This specification should include ordinance provisions from which deviations are sought, and the reason and mechanisms to be utilized for the protection of the public health, safety, and welfare, in lieu of the regulations from which deviations are sought. Only those deviations consistent with the intent of this Ordinance shall be considered.

F. Minimum Lot Size without Centralized Sewer. The minimum single-family residential lot size of any PUD that is not served by centralized sanitary sewer and water is one (1) acre, or as permitted by the Oakland County Department of Health and Human Services.

G. Density. Any application for a PUD shall be accompanied by three (3) plans: (1) a plan based on the property's existing zoning at the time of application, (2) a density plan prepared in accordance with this subsection, and (3) a PUD plan. The density allowable within a PUD shall be

determined through preparation of the density plan, which shall have the following requirements:

1. The applicant shall prepare, and present to the Planning Commission for review, a density plan for the project that is consistent with State, County, and Township requirements and design criteria for a tentative preliminary plat or site condominium, whichever is appropriate. The density plan shall meet all standards for lot size, lot width and setbacks as normally required for the underlying zoning district, as applicable, public roadway improvements and private parks, and contain an area which conceptually would provide sufficient area for stormwater management. Lots in the density plan shall provide sufficient building envelope size without impacting floodplains and wetlands regulated by the Michigan Department of Environmental Quality.

   The density plan shall be drawn at a scale not greater than 1"=100' and contain the following elements:

   a. Layout of roads and rights-of-way.

   b. Lot lines.

   c. Wetland boundaries, submerged lands.

   d. Floodplains.

   e. Lot numbers and a schedule of lot areas.

   f. Areas proposed for stormwater management.

2. The Planning Commission shall review the design and determine the number of lots that could be feasibly constructed under the density plan. This number, as determined by the Planning Commission, shall provide a guideline for the maximum number of dwelling units allowable for the PUD project. The Planning Commission may, however, recommend approval for a density credit for exemplary projects that meet the conditions outlined in Section 14.4.

3. The overall density of the project shall be determined by use of the density plan using the existing zoning designation of the property. The applicant may propose other underlying zoning categories as part of the PUD proposal for the consideration of density, subject to the Planning Commission's acceptance. In considering whether an alternate underlying zoning category proposed by an applicant is acceptable, the Planning Commission shall take into consideration the following factors:

a. Consistency with the Township's adopted Master Plan;

b. Changes in the condition of the adjacent road network;

c. Changes in the condition and extent of the Township's utility system;

d. Preservation of significant open space, farmland or natural features.

e. Overall benefit to the Township.

The ultimate density shall be recommended by the Planning Commission and determined by the Township Board and shall be based upon the existing zoning category of the subject property, or the alternate zoning category as accepted by the Planning Commission, as well as any density credit (if applicable, per Section 14.4).

4. If open space is proposed to be preserved on property that is not contiguous to the remainder of the development, pursuant to Section 14.3(I)(15), such property may be included in the density plan for purposes of calculating maximum allowable density for the overall project. Density contributed by such non-contiguous open space shall be determined in accordance with the provisions of Sections 14.3(G)(1), (2) and (3), above.

H. Natural Features. To the maximum extent feasible, the development shall be designed so as to preserve natural resources and natural features. In the interpretation of this provision, natural resources and natural features may be impaired or destroyed only if it is clearly in the public interest to do so. In determining whether an action is in the public interest, the benefit, which would reasonably be expected to accrue from the proposal, shall be balanced against the reasonably foreseeable detriments of the activity, taking into consideration the local, state, and national concern for the protection and preservation of the natural resources or features. To accomplish the desired balance, the following criteria shall be applied:

1. The availability of feasible and prudent alternative methods of completing the development;

2. The extent and permanence of the beneficial or detrimental effects of the proposed activity; and

3. The size, quality, and rarity of the natural resources or natural features that would be impaired or destroyed.

The Planning Commission and Township Board may require the submittal of a tree inventory (showing the location, size and species of all trees

measured six (6) inches DHB or greater), where significant woodlands or landmark trees are expected to be significantly impacted by the development. Further, if animal or plant habitats of significant value exist on the site, the Planning Commission and Township Board may require that the PUD plan preserve these areas in a natural state and adequately protect them within conservation easements having limited access. The Planning Commission and Township Board shall require a minimum twenty-five (25) foot wide undisturbed setback from the edge of any lake, pond, river, stream or wetland, as provided in Section 10.3; provided, however, that the Planning Commission and Township Board may permit trails, boardwalks, observation platforms, or other similar structures than enhance the passive enjoyment of the site's natural amenities, within the setback.

I. Open Space. Open space shall be preserved within PUD projects as follows:

1. Residential Planned Unit Developments, or portions thereof, shall maintain at least twenty-five percent (25%) of the Gross Buildable Area of the subject property (prior to development) as permanently protected, usable open space.

2. Non-residential Planned Unit Developments, or portions thereof, shall maintain at least ten percent (10%) of the Gross Buildable Area of the subject property (prior to development) as permanently protected, usable open space.

3. Usable open space preserved pursuant to this Section shall include both active and passive areas, and may consist of natural features, recreational areas, landscaped greenbelts or farmland. However, the following are not considered usable open space:

   a. The area of all roads, public or private, and accompanying right-of-way or easement.

   b. The area of any lot or site condominium unit proposed within the development.

   c. Wetlands regulated by either the MDEQ or under the Township's Ordinance No. 80B, lakes or other submerged lands.

   d. The required setbacks surrounding any structure, residential or otherwise, that is not located on an individual lot or site condominium unit.

   e. Stormwater management facility, including detention, retention and sedimentation basins.

f. The area of any utility easements, unless such easements could be used for building.

4. Open space shall be centrally located, located along the road frontage of the development, located to preserve significant natural features, or located to connect open spaces throughout the development.

5. Open space must be left in its natural condition, provided with recreational amenities, provided for active farming, or landscaped. Preserved open space shall not be left primarily as lawn.

6. Open space provided along exterior public roads shall generally have a depth of at least one hundred (100) feet, measured from the road right-of-way, and be either landscaped or left in a natural, wooded condition. In either case, open space along exterior public roads shall be provided with a minimum of one (1) evergreen or canopy tree for each twenty (20) feet of road frontage. Such plantings shall be planted in staggered rows or clustered into natural groupings to provide a natural appearance. Preservation of existing trees may be credited towards meeting this frontage landscaping requirement. Where the Planning Commission determines that a significant natural viewshed exists on the subject property, they may, in their discretion, require the preservation of such viewshed and prohibit the removal or disturbance of the natural landscape along the adjacent roadway where the viewshed is observed.

7. Open space must be accessible. Access can be provided via sidewalks and pathways throughout the development or where open space abuts road rights-of-way within the development.

8. Connections with adjacent open space, public land or existing or planned pedestrian/bike paths may be required by the Planning Commission.

9. Views of open spaces from lots (or units) and roads within the development are encouraged.

10. Where lakes, ponds or streams are located within or abut a development, the Planning Commission may require open space to provide waterfront access.

11. Preservation of Open Space. Open space shall be set aside by the developer through an irrevocable recorded document that is found acceptable to the Planning Commission and Township Board, such as:

    a. Recorded deed restrictions;

b. Covenants that run perpetually with the land;

c. Dedication to a land conservancy approved by the Planning Commission; or,

d. A conservation easement established per the State of Michigan Natural Resources and Environmental Protection Act, Public Act 451 of 1994 , as amended (MCL 324.2140).

12. Preservation of open space as described above under 14.3(I)(11) shall assure that open space will be protected from all forms of development, except as shown on an approved site plan, and shall never be changed to another use. The recorded document utilized shall:

a. Indicate the proposed allowable use(s) of the preserved open space. The Planning Commission and Township Board may require the inclusion of open space restrictions that prohibit the following:

i. Dumping or storing of any material or refuse;

ii. Activity that may cause risk of soil erosion or threaten any living plant material;

iii. Cutting or removal of live plant material except for removal of dying or diseased vegetation;

iv. Use of motorized off-road vehicles;

v. Cutting, filling or removal of vegetation from wetland areas;

vi. Use of pesticides, herbicides or fertilizers within or adjacent to wetlands.

b. Require that the preserved open space be maintained by parties who have an ownership interest in the open space.

c. Provide standards for scheduled maintenance of the open space.

d. Provide for maintenance to be undertaken by the Charter Township of Oxford, at the Township's option, in the event that the preserved open space is inadequately maintained, or is determined by the Township to be a public nuisance, with the assessment of costs upon the property owners.

13. Continuing Obligation. The preserved open space shall forever remain open space, subject only to uses approved by the Township on the approved site plan or plat. Further subdivision of open space land or its use for other than recreation, conservation or agricultural purposes, except for easements for utilities and septic systems, shall be strictly prohibited.

14. Allowable Structures. Any structure(s) or building(s) accessory to a recreation, conservation or agriculture use may be erected within the preserved open space, subject to the approved site plan. Accessory structures may include:

    a. Recreation structures (gazebos, boardwalks, docks, etc.);

    b. Maintenance buildings;

    c. Clubhouses;

    d. Other structures as approved by the Planning Commission.

    These accessory structures or buildings, together with their associated parking lots and access roads, shall not exceed, in aggregate, one (1) percent of the required open space area.

15. Off-Site Provision of Required Open Space. At the option of the applicant, and subject to the acceptance of the Planning Commission and Township Board, open space required pursuant to this Section may be satisfied through the acquisition and permanent preservation of open space or agricultural lands that are not contiguous to the proposed project area. Such non-contiguous open space must still adhere to the standards of Section 14.3(I)(3), (4) and (5), and should further the objectives of preserving natural features, preserving agriculture, or providing recreational opportunities addressed in the Charter Township of Oxford Master Plan and Parks and Recreation Plan.

    In the event that a proposal entails the preservation of such non-contiguous open space, the property upon which the non-contiguous open space is proposed shall be included in the calculation of required open space described above under Sections 14.3(I)(1) and (2). For example, if a property to be developed consisted of 80 acres of gross buildable area, and a property proposed to be preserved as non-contiguous open space consisted of 20 acres of gross buildable area, the percentage of open space required under Sections 14.3(I)(1) and (2) would be based upon 100 acres of gross buildable areas (i.e. the aggregate of all property involved in the proposal). Thus, for a residential PUD, a minimum of

25 acres of buildable land would be required, while a non-residential PUD would require a minimum of 10 acres.

The preservation of non-contiguous open space as part of a residential PUD shall not result in neighborhood(s) devoid of recreational facilities. At minimum, access to a park designed for active recreation of at least one (1) acre in size shall be provided within one-quarter (¼) of a mile from all proposed residences.

J. Agricultural or Equestrian Activities. Where a proposed PUD is located adjacent or in proximity to areas of the Township that where agricultural or equestrian activities are predominant land uses, measures shall be taken to minimize conflict between such uses and promote the continued use of adjacent lands for such purposes. Such measures could include, but are not limited to, one or more of the following:

1. Preservation of open space in proximity of existing agricultural or equestrian operations;

2. Maintenance of lower density and intensity of land use in proximity to existing agricultural or equestrian operations;

3. Continued use of preserved open space having proximity to existing agricultural or equestrian operations for such purposes;

4. Design of traffic circulation systems so as not to conflict with existing agricultural or operations;

5. Use of design elements, such as split rail fencing and other features drawing from the agricultural and/or equestrian vernacular of the Oxford area.

K. Infrastructure and Public Services. The proposed PUD shall not exceed the capacity of existing and available public services, including utilities, public roads, police and fire protection services, unless the project proposal contains an acceptable plan for providing necessary services or evidence that such services will be available by the time the PUD is completed. Thoroughfare, drainage, and utility design shall meet or exceed the standards otherwise applicable in connection with each of the respective types of uses served. There shall be underground installation of utilities, including electricity, telephone and cable, unless determined unfeasible to the satisfaction of the Planning Commission and Township Board.

L. Traffic Impact. The PUD shall be designed to minimize the impact of traffic generated by the proposed development on surrounding uses. In determining whether this requirement has been met, a traffic study shall be submitted as part of the PUD, and consideration shall be given to:

1. Access to, and capacity of, adjacent roads and thoroughfares.

2. Proximity and relation to intersections.

3. Estimated traffic to be generated by the proposed development.

4. Existing and projected levels of service on the adjacent road network.

5. Adequacy of driver sight distances.

6. Capacity of gravel roadways.

7. Need for current or future improvement to the adjacent road network.

8. Location of and access to off-street parking.

9. Required vehicular turning movements.

10. Provisions for pedestrian traffic.

M. Roads Master Plan. Evidence shall be provided that the proposed PUD is consistent with the proposed roads and road improvements included in the Charter Township of Oxford Roads Master Plan.

N. Access. Direct access onto a public road right-of-way shall be required of a PUD. The nearest edge of any entrance or exit drive shall be located no closer than two hundred (200) feet from any existing street or road intersection (as measured from the nearest intersection right-of-way line).

O. Internal Roads. Internal roads within a PUD may be public or private.

1. Public roadways within a PUD shall meet the design requirements of the Road Commission for Oakland County.

2. Private roadways within a PUD shall meet the requirements of Article 11.

3. It shall be indicated on the plans whether on-street parking is proposed for internal road within the PUD. Road widths shall be coordinated to insure that adequate road width is provided to allow safe and efficient circulation of vehicles through the development.

4. Both sides of all internal roads shall be landscaped with street trees. For road frontages of individual lots or condominium sites, a minimum of two (2) canopy trees shall be provided per residential dwelling. For sections of road that do not abut lots or condominium sites, a minimum of one (1) canopy tree shall be provided per side

for every fifty (50) feet of road frontage. Existing trees to be preserved within five (5) feet of the road right-of-way or easement may be credited towards meeting this requirement, at the discretion of the Planning Commission, when a tree survey has been provided in accordance with Section 14.3(H).

P. Parking. Parking shall be so designed as to minimize imperviousness, minimize visual impacts onto neighboring property and the public right-of-way, and promote safety and accessibility. In accomplishing these objectives, a PUD shall incorporate one (1) or more of the following:

1. Reduce parking and impervious areas to the minimum necessary to serve the proposed use(s).

2. Bank parking where it is not foreseen to be needed in the immediate future.

3. Design parking so it may be shared between two (2) or more uses or buildings where it can be shown that all uses or buildings will have sufficient parking at the times of day when such parking is needed.

4. Concentrate parking to the sides and/or rear of the development, as opposed to the front of the building(s) adjacent to the road right-of-way.

5. Provide perimeter or arterial collector drives that are free from parking spaces and provide direct, safe, and efficient circulation of vehicles in and out of proposed parking areas.

Q. Pedestrian Circulation. The PUD plan shall provide pedestrian access to all open space areas from all residential/development areas, connections between open space areas, public thoroughfares and connections between appropriate on-site and off-site uses, subject to the following:

1. Trails within the PUD may be constructed of gravel, wood chips or other similar materials, but the Planning Commission and Township Board may require construction of an eight (8) foot wide asphalt safety path through portions of the development.

2. Safety paths shall be provided along all perimeter roads, pursuant to Safety Path Regulation Ordinance, Ord. 117, as well as new collector and arterial roads.

3. Sidewalks shall be provided along all local roads internal to the development.

4. In all cases, where separation can be accomplished without significantly reducing the kind and density of uses, the pedestrian circulation system, and its related walkways and safety paths, shall be separated from vehicular thoroughfares and roadways.

5. Pedestrian and other non-motorized transportation routes identified in the Township's Master Plan shall be incorporated into the pedestrian circulation system, as applicable.

R. Compatibility with Adjacent Uses. The proposed PUD shall set forth specifications with respect to height, setbacks, density, parking, circulation, landscaping, views, and other design and layout features which demonstrate due regard for the relationship of the development to surrounding properties and the uses thereon, as well as the relationship between residential and non-residential uses within the PUD project itself. In determining whether this requirement has been met, consideration shall be given to:

1. The bulk, placement, and materials of construction of proposed structures.

2. The location and screening of vehicular circulation and parking areas in relation to surrounding development.

3. The location and screening of outdoor storage, outdoor activity or work areas, loading areas, and mechanical equipment in relation to surrounding development.

4. The hours of operation of the proposed uses.

5. The provision of landscaping and other site amenities.

S. Buffering and Transition Areas**.** Where the PUD abuts land zoned or used for residential purposes, the Planning Commission and Township Board may require a transition area. The Planning Commission may review the proposed transition area to ensure compatibility, with consideration of the particular scale of the proposed project, magnitude of disparity between the proposed PUD and the existing residential land, and other relevant factors. The Planning Commission and Township Board may require that the transition area consist of one (1) or more of the following:

1. One or more rows or clusters of single-family residential lots or units similar to the adjacent single-family developments in terms of density, lot area, lot width, setbacks and building spacing.

2. Woodlands, natural features and/or a landscaped greenbelt sufficient to provide an obscuring effect.

3. Open or recreational space.

4. Berming or other significant changes in topography, which provide an effective buffer.

5. If the PUD project includes non-residential uses adjacent to a district authorizing residential uses, a perimeter setback shall be established with a dimension from the property line of up to one hundred (100) feet, at the discretion of the Planning Commission and Township Board, taking into consideration the use or uses in and adjacent to the development. The setback distance need not be uniform at all points on the perimeter of the development.

In order to evaluate whether the proposed transition area is suitable, the Planning Commission and Township Board may require the submission of cross-section illustrations at points along the property line(s) in question, illustrating existing and proposed buildings, grades, lighting, landscaping, parking and loading, mechanical units, and the like. Perspective renderings from adjacent residential units are encouraged.

In all cases where non-residential uses abut residentially-zoned or used property, noise reduction and visual screening mechanisms such as earthen berms, landscape screens and/or decorative walls shall be employed. The Planning Commission and Township Board, at their discretion, shall review and approve the design and location of such mechanisms in an effort to maximize, to a reasonable extent, the screening and buffering of existing or proposed residential property.

T. Architectural and Site Element Design.

1. Residential facades shall not be dominated by garages; a portion of proposed residential units shall have side-entry garages, rear-entry garages, or recessed garages where the front of the garage is at least five (5) feet behind the front line of the living portion of the principal dwelling. The intent of encouraging recessed or side-entry garages is to enhance the aesthetic appearance of the development and minimize the visual impact resulting from the close clustering of units allowed under these regulations.

2. Building elevations shall be required for all structures other than custom-built single-family dwellings.

3. Signage, lighting, entryway features, landscaping, building materials for the exterior of all structures, and other features of the project, shall be designed and completed with the objective of achieving an integrated and cohesive development, consistent with the character of the community, surrounding development, and natural

features of the area. The Planning Commission and Township Board may require street or site lighting where appropriate.

U. Traditional Design Concept. Where a PUD is proposed adjacent or in proximity to areas where historic, traditional settlement patterns persist, the Planning Commission may require a proposed PUD, or portion thereof, to extend such settlement patterns. Traditional settlement patterns can include, but are not limited to, rectilinear street grids broken into blocks of reasonable size, pedestrian amenities and orientation, traditional architecture, etc.

V. Existing Structures. When a tract or parcel of land proposed for PUD consideration contains structures or buildings deemed to be of historic, cultural, agricultural, or architectural significance, as determined by the Planning Commission and Township Board, and are suitable for rehabilitation, the structures shall be retained. Adaptive reuse of existing structures for residential or non-residential use or permitted accessory uses shall be encouraged.

W. Impervious Surface Reduction/Infiltration Enhancement. The Township recognizes that, due to the specific requirements of any given development, inflexible application of the design standards may result in development with excessive paving and stormwater runoff and a waste of space which could be left as open space.

Through procedures prescribed by these PUD regulations, the Township may permit deviations from requirements allowing for reduction in impervious surfaces whenever it finds that such deviations are more likely to meet the intent and standards of this Ordinance and accommodate the specific characteristics of the use in question. Measures that reduce impervious surface and increase infiltration may include, but are not limited to, the following:

1. Streets and Access.

   a. Design residential streets with the minimum required pavement width needed to support travel lanes, on-street parking, and emergency, maintenance, and service vehicle access and function based on traffic volumes.

   b. Decrease the total length of residential streets by examining alternative street layouts to determine the best option for increasing the number of homes per unit length.

   c. Minimize the number of street cul-de-sacs and where cul-de-sacs do exist, provide landscape center islands.

d. Use vegetated open channels in the street right-of-way/private road easements to convey and treat stormwater runoff.

e. Use alternative driveway surfaces and shared driveways that connect two or more sites.

2. Parking.

a. Base parking requirements on the specific characteristics of the use, land-banking in open space parking required to satisfy Ordinance requirements.

b. Reduce the overall imperviousness associated with parking lots by providing compact car spaces, minimizing stall dimensions, incorporating efficient parking lanes, and using pervious materials in the spillover parking areas where possible.

c. Encourage shared parking between compatible users.

3. Site Design.

a. Direct rooftop runoff to pervious areas such as yards, open channels, or vegetated areas and avoid routing rooftop runoff to the roadway and the stormwater conveyance system.

b. Create a naturally vegetated buffer system which may vary in width as determined by the Township along all drainage ways. Critical environmental features such as the one hundred (100) year floodplain, steep slopes, and wetlands shall be considered.

c. Minimize clearing and grading of woodlands and native vegetation to the minimum amount needed to build lots, allow access, and provide fire protection.

d. Conserve trees and other vegetation at each site by planting additional vegetation, clustering tree areas, and promoting the use of native plants.

X. Additional Considerations. The Planning Commission shall take into account, in considering approval or denial of a particular project, the following considerations, as the same may be relevant to a particular project: drainage and utility design; underground installation of utilities; achievement of an integrated development with respect to signage, lighting, land-

scaping and building materials; and noise reduction and visual screening of mechanical equipment.

14.4 Density Credit for Exemplary Projects.

A. The Planning Commission and Township Board may allow an exemplary Planned Unit Development (PUD) to include a variable density credit of up to fifteen (15) percent pursuant to this Section. In order to qualify for such increase in density, the applicant shall demonstrate to the satisfaction of the Planning Commission and Township Board that the proposed project exhibits design excellence and exceeds the minimum standards for PUD eligibility under Section 14.2.

B. In order to qualify for development under the optional provisions of this Section, architectural standards shall be subject to review by the Planning Commission and Township Board. Buildings shall be harmonious with adjacent uses in terms of texture, materials, roof lines and mass, but there shall be a variation of front facade depth and roof lines to avoid monotony. Building elevations shall be required for all structures, including single-family homes.

C. Projects qualifying for a density credit shall provide elements such as the following:

1. A high level of clustered development, where at least forty (40) percent of the gross buildable area of the site is preserved as common open space.

2. Providing perimeter transition areas or greenbelts around all sides of the development that are at least one hundred (100) feet in depth.

3. The proposed plan is designed to enhance surface water quality and ground water quality.

4. Provisions and design that preserve and enhance natural features.

5. Donation or contribution of land or amenities that represent significant community benefit.

6. Other similar elements as determined by the Planning Commission and Township Board.

14.5 Project Approval Criteria. In considering any application for approval of a Planned Unit Development (PUD) plan, the Planning Commission and Township Board shall make their determinations on the Criteria for Site Plan Approval set forth in Section 12.5, as well as the following standards and requirements:

A. Consistency with PUD Concept and Design Standards. The overall design and land uses proposed in connection with a PUD plan shall be consistent with the intent of the PUD concept, as well as with specific design standards set forth herein.

B. Compatibility with Adjacent Uses. The proposed PUD plan shall set forth in detail, all specifications with respect to height, setbacks, density, parking, circulation, landscaping, views, and other design features that exhibit due regard for the relationship of the development to surrounding properties, the character of the site, and the land uses. In determining whether this requirement has been met, consideration shall be given to:

1. The bulk, placement, and materials of construction for the proposed structures.

2. Pedestrian and vehicular circulation.

3. The location and screening of vehicular use or parking areas.

4. The provision of landscaping and other site amenities.

C. Impact of Traffic. The proposed PUD shall be designed to minimize the impact of traffic generated by the PUD on surrounding uses.

D. Protection of Natural Environment. The proposed PUD shall be protective of the natural environment. It shall comply with all applicable environmental protection laws and regulations.

E. Compliance with Applicable Regulations. The proposed PUD shall comply with all applicable federal, state, and local regulations.

F. Township Master Plan. The proposed PUD shall be consistent with, and further the implementation of, the Township Master Plan. If the proposed PUD is not consistent with the Master Plan, the Planning Commission and Township Board may consider reasons for deviating from the Master Plan. This could include one or more of the following:

1. Changes in surrounding land use or zoning.

2. Changes in the condition or extent of infrastructure, such as roads, sewers, etc.

3. Township benefit.

4. Design excellence.

14.6 Procedures for Review and Approval. The planned unit development approval process shall constitute a rezoning coupled with a site plan, in which the resultant

PUD zoning designation is strictly tied to the details contained on the associated site plan, those provisions of the Zoning Ordinance that have not been specifically modified by the proposed PUD, and any other conditions imposed upon the PUD approval. Planned unit development proposals shall adhere to the following procedures for review and approval, which have been summarized in the flowchart below:

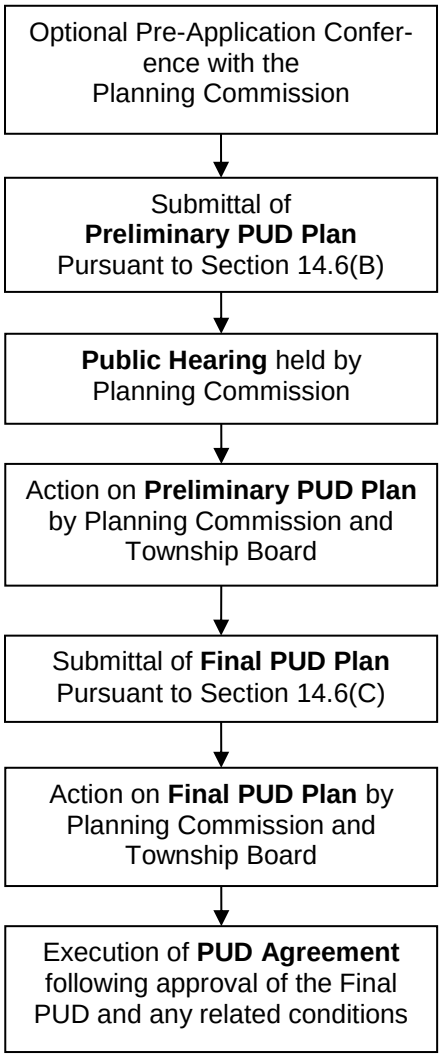

A. Pre-Application Conference. Prior to the submission of an application for Planned Unit Development (PUD) approval, an optional pre-application conference may be held at a regularly-scheduled or special meeting of the Planning Commission. The purpose of this conference shall focus on the PUD process and required information, as outlined in this Section, and shall not constitute any form of official review and approval of the PUD project. Nor shall this conference in any way circumvent, replace, or supersede the review and approval powers of the Planning Commission and Township Board regarding the PUD application. The applicant shall pre-

sent at such conference, or conferences, at least a sketch plan of the proposed PUD, as well as the following information:

1. Total size of the project.

2. A statement of the number of residential units, if any.

3. The number and type of non-residential uses.

4. The size of the area to be occupied by each type of use.

5. The known deviations from ordinance regulations to be sought.

6. The number of acres to be preserved as open or recreational space.

7. All known natural or historic features to be preserved.

8. Anticipated demand for public sanitary sewer and water service.

9. The extent of known soil or groundwater contamination on the site.

B. Preliminary PUD Plan. Following the optional pre-application conference (if one was held), the applicant shall submit a Preliminary PUD Plan and application for the proposed PUD.

1. Submittal. The Preliminary PUD Plan, application form, and supplementary materials shall be submitted to the Building Department and shall be put on the next available Planning Commission agenda for consideration. Upon their initial consideration of the proposed Preliminary PUD Plan, the Planning Commission shall set a date for the required public hearing.

2. Information Required. Every Preliminary PUD Plan submitted for review under this Section shall contain all of the following data prior to its submission to the Planning Commission for review and approval. Submittals shall be made in both digital and paper formats. The contents of digital and paper submittals shall be identical to one another. Digital submittals shall be provided in PDF file format on CD. Paper submittals shall be provided with a sheet size of at least 24" x 36". The scale of all plan view drawings shall be a maximum of 1" = 50' for property less than five (5) acres, or a maximum of 1" = 100' for property five (5) or more acres. Any of the following requirements may be waived by the Planning Commission when determined to be unnecessary, not applicable, or premature at this stage of review, given the nature, size, and scope of the development.

a. A narrative description of the project, discussing the market concept of the project, and explaining the manner in which the criteria set forth for eligibility and design have been met.

b. Provide evidence of compatibility with the Master Plan.

c. Provide evidence of compatibility with all adjacent uses.

d. An explanation of why the submitted PUD plan is superior to a plan that could have been prepared under strict adherence to related sections of this Ordinance.

e. Applicant's name, address, and telephone number.

f. The name of the proposed development.

g. Common description of the property and complete legal description.

h. Dimensions of land, including width, length, acreage, and frontage.

i. Existing zoning and current land use of the property under consideration and zoning and current land use of all adjacent properties.

j. General location of all existing structures, roadways, and natural features including, but not limited to, topographical contours at two (2) foot intervals, lakes, streams, wetlands and/or other watercourses, specimen trees and/or stands of trees on and within one hundred (100) feet of the subject site.

k. Locations of existing culturally, historically, and architecturally significant structures.

l. Name, address, city and phone number of the firm or individual who prepared the plan; and the owner of the property.

m. The density plan as set forth in Section 14.3(G).

n. The proposed underlying zoning district (if different than the existing zoning district in which the property is currently located).

o. Any proposed density bonus pursuant to Section 14.4.

p. Superimposed on the existing conditions drawing or by transparent overlay on such drawing or on a recent aerial photograph of the site, the general location of all proposed buildings, roadways, parking areas, and any other changes proposed to be made on the subject property. The drawing shall also indicate proposed preliminary spot grades in sufficient number to show the general intent of proposed grading, with emphasis on grading to be done in areas of existing natural features such as existing vegetation, trees, slopes or wetlands.

q. A traffic study, pursuant to Section 14.3(L).

r. Layout of proposed structures, parking lots, drives and other site improvements.

s. An outline of the design elements implemented to achieve compatibility with adjacent land uses, as necessary to determine compliance with Section 14.5(B).

t. A table outlining all proposed deviations from the requirements of the Zoning Ordinance that are embodied in the PUD proposal, as required under Section 14.3(E).

u. An outline of preliminary conditions and/or stipulations to be attached to the PUD proposal, revised to include those items agreed upon through negotiation between the applicant and the Planning Commission and Township Board.

v. Any additional graphics or written materials requested by the Planning Commission or Township Board, to assist the Township in determining the appropriateness of the PUD.

3. Public Hearing. The Preliminary PUD Plan shall be noticed for a public hearing before the Planning Commission, in accordance with the procedures, public notice, and hearing requirements for rezoning approval as set forth in Article 18. If any Planning Commissioner is unable to attend the public hearing, they may submit written comments to the Township Clerk, who will forward them to the Planning Commission for inclusion into the record of the hearing.

4. Planning Commission Action. Following the public hearing, or at a subsequent Planning Commission meeting, the Planning Commission shall review the Preliminary PUD Plan and shall take one of the following actions:

a. Approval. Upon finding that the Preliminary PUD Plan meets the criteria set forth in the intent and this Section, the Plan-

ning Commission shall recommend approval of the Preliminary PUD Plan to the Township Board.

Approval by the Township Board shall constitute approval of the uses, density, and design concept as shown on the Preliminary PUD Plan but shall only confer upon the applicant the right to proceed to preparation of the Final PUD Plan. However, such Preliminary PUD approval shall not constitute final approval of the rezoning of the property to the PUD zoning designation. In no case shall a recommendation regarding the Preliminary PUD Plan by the Planning Commission bind the Township Board to approve or deny the Preliminary PUD Plan submittal.

b. Approval with Changes or Conditions. The Planning Commission may recommend conditional approval to the Township Board, subject to modifications as performed by the applicant.

c. Postponement. Upon finding that the Preliminary PUD Plan does not meet the criteria set forth in the intent of this Section, but could meet such criteria if revised, the Planning Commission may recommend that action on the proposal be postponed until a revised Preliminary PUD Plan is submitted.

d. Denial. Upon finding that the Preliminary PUD Plan does not meet the criteria set forth in the intent of this Section, the Planning Commission shall recommend denial of the Preliminary PUD Plan to the Township Board. Such recommendation shall be accompanied by findings of fact articulating those eligibility criteria, design standards and/or approval criteria that the Planning Commission believes are contradicted by the PUD proposal.

5. Township Board Action. Upon finding that the Planning Commission has issued a recommendation on the Preliminary PUD Plan, the Township Board may approve, approve with conditions, postpone or deny said Preliminary PUD Plan. Once the Township Board approves, approves with conditions, or denies the Preliminary PUD, the Clerk shall notify both the applicant and Planning Commission, in writing, of the Township Board's action.

C. Final PUD Plan. Following Township Board action on the Preliminary PUD Plan, the applicant shall submit a Final PUD Plan and application for the proposed PUD. If a Final PUD Plan is not submitted by the applicant for final approval within twelve (12) months of Preliminary PUD Plan approval by the Township Board, the Preliminary PUD Plan approval be-

comes null and void. In the case of multi-phase projects, such application for final approval shall be submitted for at least one (1) phase in the project. The Planning Commission may, however, issue a waiver for greater periods of time if it is determined to be appropriate, as a condition of Preliminary PUD Plan approval. Such extension and request of waiver shall be made prior to the expiration date.

1. Submittal. The Final PUD Plan, application form, and supplementary materials shall be submitted to the Building Department and shall be put on the next available Planning Commission agenda for consideration.

2. Information Required. Every Final PUD Plan submitted for review under this Section shall contain all of the following data prior to its submission to the Planning Commission for review and approval. Submittals shall be made in both digital and paper formats. The contents of digital and paper submittals shall be identical to one another. Digital submittals shall be provided in PDF file format on CD. Paper submittals shall be provided with a sheet size of at least 24" x 36". The scale of all plan view drawings shall be a maximum of 1" = 50' for property less than five (5) acres, or a maximum of 1" = 100' for property five (5) or more acres. Any of the following requirements may be waived by the Planning Commission when determined to be unnecessary, not applicable, or premature at this stage of review, given the nature, size, and scope of the development.

    a. All information required for Preliminary PUD plan submittal.

    b. All submittal requirements for Final Site Plan review as specified in Section 12.3(C)(2) of this Ordinance.

    c. Layout and typical dimensions of proposed lots, building footprints, and dimensions of proposed buildings and structures, and uses, with the acreage allotted to each use.

    d. Proposed grades shown using contours of no greater than two (2) foot intervals.

    e. Detailed depiction of those natural features which are to be preserved, modified or disturbed, or destroyed, shown in relation to the limits of proposed grading and land disturbance.

    f. Location, acreage and dimensions of areas to be preserved as open space, distinguishing between that open space which meets the standards of Section 14.3(I)(3), and that which does not.

g. A landscape plan, indicating the type, location, quantity, size and species of all plant materials proposed, along with details of non-plant landscape treatment. The landscape plan shall also note existing trees and landscaping to be retained.

h. Site improvements and amenities including, but not limited to, lighting, signage, play equipment, landscape features, pedestrian amenities, and the like, as well as those mechanisms designed to reduce audible and/or visual impacts.

i. A utility master plan for the entire PUD site, including the location and size of all public and private utilities, utility services, storm sewers, basins, and necessary easements.

j. Number, location and dimensions of proposed parking areas and individual spaces.

k. Cross-sections of proposed roads, paths, sidewalks and other paved areas, illustrating proposed construction materials and thicknesses thereof.

l. Proposed street names as approved by the Township Fire Chief and the Road Commission for Oakland County.

m. Proposed off-site road improvements, including, but not limited to, acceleration, deceleration, and passing lanes.

n. Architectural elevations, floor plans and building materials proposed for the exterior of buildings and structures proposed within the development.

o. Draft Master Deed, Bylaws, and Exhibit B drawings, or similar restrictions and covenants, as applicable, including all necessary provisions for the maintenance of proposed stormwater facilities, private roads, open space and other comment elements and/or facilities.

p. The anticipated schedule of development and construction for the project, including proposed phasing.

q. Letters of preliminary or conceptual approval from all outside agencies having jurisdiction over the project, such as, but not limited to, the Road Commission for Oakland County, Oakland County Drain Commissioner, Oakland County Department of Health and Human Services, and Michigan Department of Environmental Quality. For those agencies that require final permit approval prior to construction, this shall not be construed to require evidence of such approval.

r. A delineation of all deviations from this Ordinance that would otherwise be applicable to the uses and development proposed in the absence of this PUD Section.

s. Evidence demonstrating that the conditions placed on the Preliminary PUD approval have been addressed.

t. Draft PUD Agreement, prepared by the Township's Attorney and Planner, encompassing all conditions, benefits, zoning deviations, etc., negotiated as part of the proposal.

u. Any additional graphics or written materials requested by the Planning Commission or Township Board, to assist the Township in determining the appropriateness of the PUD.

v. Signatures of all parties having an interest in the property.

w. Copies of all drawings and materials larger than an 8½" x 11" sheet of paper shall be provided to the Township in an acceptable digital format.

3. Consistency with Preliminary PUD Approval. The Final PUD Plan shall be consistent with the approved Preliminary PUD Plan, in terms of land use, layout, density, open space preservation and any other consideration addressed under the Preliminary PUD. If, upon submittal of the Final PUD Plan, the Planning Commission determines that such consistency has not been maintained, another public hearing shall be held pursuant to Section 14.6(B)(3), and the Planning Commission shall reaffirm their approval of the Preliminary PUD before proceeding with consideration of the Final PUD Plan. The foregoing requirement shall not preclude the Planning Commission from holding additional public hearings as they deem necessary.

4. Planning Commission Action. The Planning Commission shall review the Final PUD Plan and shall take one of the following actions:

a. Approval. Upon finding that the Final PUD Plan meets the approval criteria of this Article, the Planning Commission shall recommend Final PUD Plan approval to the Township Board.

b. Approval with Changes or Conditions. The Planning Commission may recommend conditional approval to the Township Board, subject to modifications as performed by the applicant.

c. Postponement. Upon finding that the Final PUD Plan does not meet the approval criteria of this Article, but could meet such criteria if revised, the Planning Commission may recommend that action on the proposal be postponed until a revised Final PUD Plan is submitted.

d. Denial. Upon finding that the Final PUD Plan does not meet the approval criteria of this Article, the Planning Commission shall recommend denial of the Final PUD Plan to the Township Board.

5. Township Board Action. The Township Board shall review the Final PUD Plan and shall take one of the following actions:

a. Approval. Upon finding that the Final PUD Plan meets the approval criteria of this Article, the Township Board may approve the Final PUD.

b. Approval with Changes or Conditions. The Township Board may conditionally approve the Final PUD, subject to modifications as performed by the applicant.

c. Postponement. Upon finding that the Final PUD Plan does not meet the approval criteria of this Article, but could meet such criteria if revised, the Township Board may postpone action until a revised Final PUD Plan is submitted.

d. Denial. Upon finding that the Final PUD Plan does not meet the approval criteria of this Article, the Township Board shall deny the Final PUD.

6. All actions on the Preliminary PUD Plan or Final PUD Plan by the Planning Commission and the Township Board shall state the reasons for approval, conditional approval, postponement, or denial within the body of the motion.

7. Upon approval of the Final PUD Plan, with any related conditions having been reviewed and approved, the Township may finalize and sign the final copy of the PUD Agreement and plan set. This shall not occur, however, until all exhibits (such as the final version of the Final PUD plans and building elevations; conservation, road and utility easement documents; recorded Master deeds or similar restrictions, etc.) are properly prepared and made available to the Township. The PUD (and corresponding zoning change) shall not be considered finalized until the executed PUD Agreement has been recorded with the County.

8. Following approval by the Township Board, and recording of the executed PUD Agreement, the Clerk shall direct the planning consultant to amend the Township Zoning Map to reflect the PUD approval by amending the zoning designation of the subject project.

D. Relationship between PUD Review and Acreage Division, Platting and Condominium Review. In the event that a planned unit development involves the partitioning of land into separate parcels, lots or condominium units, as enabled by Ordinance 104A, Ordinance 103, or Article 13 of this Ordinance, respectively, such review procedures may occur concurrent with PUD consideration. With respect to the platting process, tentative preliminary and final preliminary plat approval may be pursued concurrent with preliminary and final PUD approval, respectively, as provided for in this Section. Land division or condominium approval may be pursued concurrent with either preliminary or final PUD approval.

E. PUD Conditions.

1. Reasonable conditions may be required by the Township Board before the approval of a PUD, to the extent authorized by law, for the purpose of ensuring that public services and facilities affected by a proposed land use or activity will be capable of accommodating increased service and facility loads caused by the land use or activity, protecting the natural environment and conserving natural resources and energy, ensuring compatibility with adjacent uses of land, and promoting the use of land in a socially and economically desirable manner. The conditions of approval shall be drafted in writing, specifying conditions of approval and use, and incorporated in the PUD Agreement executed upon Final PUD approval.

2. Conditions may stipulate that the PUD may only be used for selective land uses, provided the restraints advance, rather than injure, the interests of adjacent landowners; are a means of harmonizing private interests in land, thus benefiting the public interest; are for the purposes of ensuring that the PUD fulfills the purposes and intent of this Section and thus, benefits the public interest; and/or possess a reasonable relationship to the promotion of the public health, safety, and welfare.

3. Conditions imposed shall be designed to protect natural resources and the public health, safety, and welfare of individuals in the project and those immediately adjacent, and the community as a whole; reasonably related to the purposes affected by the PUD; and, necessary to meet the intent and purpose of this Ordinance, and be related to the objective of ensuring compliance with the standards of this Ordinance. All conditions imposed shall be made a part of the written record of the Final PUD Plan that shall include

a site plan and written development agreement signed by the Township Supervisor, the Township Clerk and the applicant.

4. In the event that conditions set forth herein are not complied with, then the Zoning Enforcement Official shall have the right to compel a show cause hearing by the Planning Commission or issue a violation pursuant to Article 16 of this Ordinance. At the show cause hearing, additional conditions may be imposed by the Township and/or a new PUD application required.

14.7 Phasing and Commencement of Construction.

A. Phasing. Where a project is proposed for construction in phases, the planning and designing shall be such that, upon completion, each phase shall be capable of standing on its own in terms of the presence of services, facilities, and open space, and shall contain the necessary components to ensure protection of natural resources and the health, safety, and welfare of the users of the Planned Unit Development (PUD) and the residents of the surrounding area. In addition, in developments which include residential and non-residential uses, the relative mix of uses and the scheduled completion of construction for each phase shall be disclosed and determined to be reasonable in the discretion of the Township Board, after recommendation from the Planning Commission. Similarly, the schedule upon which any and all community benefits proposed in association with the development will be installed or otherwise become available shall be disclosed and determined to be reasonable at the discretion of the Township Board.

B. Commencement and Completion of Construction. Construction shall be commenced within one (1) year following the date of Final PUD Plan approval and shall proceed substantially in conformance with the schedule set forth by the applicant and in accordance with this Ordinance. If construction is not commenced within such time, any previous PUD plan approval shall expire and become null and void unless an extension is granted. An extension for up to one (1) year may be granted by the Planning Commission, upon good cause shown, if such request is made to the Planning Commission prior to the expiration of the initial period. Moreover, in the event the PUD plan approval has expired, a new application shall be required, and shall be reviewed according to existing and applicable law and ordinance provisions at the time of any subsequent submission.

14.8 Effect of Approval.

A. If and when approved, the Final PUD Plan for the Planned Unit Development (PUD), with any conditions imposed, shall constitute the land use authorization for the property, and all improvements and uses shall be in

conformity with the approved plan. Subsequent to approval of the Final PUD Plan, the Zoning Official shall not issue building permits or Certificates of Occupancy unless the Zoning Official determines that all subsequent working drawings and plans comply with the approved Final PUD Plan and the Planning Commission's resolution of approval. However, once a PUD receives final approval, the Township shall not refuse to issue the necessary permits if the development proceeds in conformance with the approved plan, even though the PUD regulations and procedures may be changed or amended.

B. It shall be the responsibility of the applicant to obtain all other applicable Township, County, and State permits for all phases of the project prior to commencing any clearing, earthwork, or other site development related work.

C. Since eligibility for a PUD rests entirely upon proof of specific substantial benefits to the community, as well as to the applicant, these benefits shall be considered part of the contract between the Township and the applicant. The benefits agreed upon by the Township and the applicant shall be listed on the plans and incorporated into the PUD Agreement.

Any breach, such as modification, disturbance, or destruction of natural features designated to remain untouched, shall cause approval of the PUD to be held null and void and shall result in suspension of all permits issued until the breach has been remediated to a condition as close as possible to that designated in the PUD plan.

Alternatively, the applicant may, at his discretion, commence the approval process again from the beginning. In this event, however, the Township shall be under no obligation whatsoever to approve the new project. Approval shall be entirely at the discretion of the Township, which may impose additional conditions on the applicant.

14.9 Modifications to Approved Final PUD Plans.

A. Deviations shall be reviewed by a Planned Unit Development Committee comprised of the Township Supervisor and one additional representative of the Township Board, the Planning Commission Chairperson and one additional representative of the Planning Commission, and the Township Zoning Official. Meetings of the PUD Committee shall be noticed and conducted in accordance with the Open Meetings Act, P.A. 267 or 1976.

B. An applicant or property owner who has been granted Final PUD approval shall notify the Planned Unit Development Committee of any proposed amendment to such approved site plan or Planned Unit Development conditions.

C. Minor Modifications. Minor modifications may be approved by the Planned Unit Development Committee upon certification in writing to the Planning Commission and Township Board that the proposed revision does not alter the basic design nor any conditions of the plan imposed upon the original approval by the Planning Commission and Township Board. In considering such a determination, the Planned Unit Development Committee shall consider the following to be a minor change:

1. Such changes will not adversely or substantially affect the initial basis for granting approval.

2. Such minor changes will not adversely or substantially affect the overall PUD, in light of intent and purpose of such development as set forth in Section 14.1.

3. For residential buildings, the size of structures may be decreased, or increased by up to ten (10) percent provided that the overall density of units does not increase.

4. Square footage of non-residential buildings may be decreased, or increased by up to ten (10) percent or 10,000 square feet, whichever is smaller.

5. Horizontal and/or vertical elevations may be altered by up to five (5) percent.

6. Movement of a building or buildings by no more than ten (10) feet.

7. Areas of disturbance may be decreased.

8. Plantings approved in the final PUD landscape plan may be replaced by similar types of landscaping on a one-to-one or greater basis.

9. Improvements to site access or circulation, such as inclusion of deceleration lanes, boulevards, curbing, pedestrian/bicycle paths, etc.

10. Changes of building materials to another of higher quality.

11. Changes in floor plans which do not alter the character of the use.

12. Slight modification of sign placement or reduction of size.

13. Relocation of sidewalks and/or refuse storage stations.

14. Internal rearrangement of parking lots that does not affect the number of parking spaces or alter access locations or design.

15. Changes required or requested by the Township for safety reasons shall be considered a minor change, provided that they do not result in substantive changes in the approved PUD design.

D. Major Modifications. Modifications other than those noted above are considered major changes and shall be treated as a rezoning, requiring resubmittal to the Township and a new public hearing held pursuant to Section 14.6(B)(3). The procedures outlined in this Article shall apply in all such cases, however the Township may allow concurrent Preliminary and Final PUD review for major modifications to previously-approved PUD projects.

14.10 Recording of Planning Commission and Township Board Actions.

A. Each action taken with reference to a Planned Unit Development (PUD) shall be duly recorded in the minutes of the Planning Commission and Township Board. The reasons for the action taken shall also be recorded in the minutes.

B. A notice of adoption of the PUD shall be filed with the Oakland County Register of Deeds.

14.11 Costs Associated with PUD Review. Costs incurred by the Township associated with the processing of PUD proposals and the preparation of PUD Agreements (including review by the Township's consultants) shall be covered in full through the collection of appropriate fees and escrows by the Township. The Township Board may from time to time establish an appropriate fee schedule for PUD Review and PUD Agreement drafting by Resolution.

ARTICLE 15
NONCONFORMITIES

15.1 Intent. It is the intent of this Ordinance to permit nonconforming lots, structures, or uses to continue until they are removed but not to encourage their survival.

It is recognized that there exists within the districts established by this Ordinance and subsequent amendments, uses which were lawful before this Ordinance was passed or amended which would be prohibited, regulated, or restricted under the terms of this Ordinance or future amendments. Such uses are declared by this Ordinance to be incompatible permitted uses in the districts involved. It is further the intent of this Ordinance that nonconformities shall not be enlarged upon, expanded or extended, nor be used as grounds for adding other structures or uses prohibited elsewhere in the same district.

A nonconforming use of a structure, a nonconforming use of land, or a nonconforming use of a structure and land shall not be extended or enlarged after passage of this Ordinance by attachment on a building or premises of additional signs intended to be seen from off the premises, or by the addition of other uses of a nature which would be prohibited generally in the district involved.

To avoid undue hardship, nothing in this Ordinance shall be deemed to require a change in the plans, construction, or designated use of any building on which actual construction was lawfully begun prior to the effective date of adoption or amendment of this Ordinance and upon which actual building construction has been diligently carried on. Actual construction is hereby defined to include the placing of construction material in permanent position and fastened in a permanent manner; except that where demolition or removal of an existing building has been substantially begun preparatory to rebuilding, such demolition or removal shall be deemed to be actual construction, provided that work shall be diligently carried on until completion of the building involved.

15.2 Nonconforming Lots.

A. In any district in which single-family dwellings are permitted, notwithstanding limitations imposed by other provisions of this Ordinance, a single-family dwelling and customary accessory buildings may be erected on any single lot of record legally existing at the effective date of adoption or amendment of this Ordinance. This provision shall apply even though such lot fails to meet the requirements for area, or width, or both, that are generally applicable in the district; provided that yard dimensions and other requirements not involving area or width, or both, of the lot shall conform to the regulations for the district in which such lot is located. Yard requirement variances may be obtained through approval of the Board of Appeals.

B. Where multiple lots of record in an existing subdivision plat have been combined, they may be redivided to match the same lot boundaries shown on the original plat, without prior approval of variances from the ZBA for minimum lot width or area requirements.

15.3 Nonconforming Uses of Land. Where, at the effective date of adoption or amendment of this Ordinance, lawful use of land exists that is made no longer permissible under the terms of this Ordinance as enacted or amended, such use may be continued, so long as it remains lawful, subject to the following provisions:

A. No such nonconforming use shall be enlarged or increased, nor extended to occupy a greater area of land than was occupied at the effective date of adoption or amendment of this Ordinance.

B. No such nonconforming use shall be moved in whole or in part to any other portion of the lot or parcel occupied by such use at the effective date of adoption or amendment of this Ordinance.

C. If such nonconforming use of land ceases for any reason for a period of more than one hundred eighty (180) days, any subsequent use of such land shall conform to the regulations specified by this Ordinance for the district in which such land is located.

15.4 Nonconforming Structures. Where a lawful structure exists at the effective date of adoption or amendment of this Ordinance that could not be built under the terms of this Ordinance by reason of restrictions on area, lot coverage, height, yards, or other characteristics of the structure or its location on the lot, such structure may be continued so long as it remains otherwise lawful, subject to the following provisions:

A. No such structure may be enlarged or altered in a way which increases its nonconformity; for example, existing residences on lots of a width less than required herein may add a rear porch provided that other requirements relative to yard space and land coverage are met.

B. Should such structure be destroyed by any means to an extent of more than fifty (50) percent of its replacement cost, exclusive of the foundation at the time of destruction, it shall not be reconstructed except in conformity with the provisions of this Ordinance.

C. Should such structure be moved for any reason for any distance whatever, it shall thereafter conform to the regulations of the district in which it is located after it is moved.

15.5 Nonconforming Uses of Structures and Land. If a lawful use of a structure, or of structures and land in combination, exists at the effective date of adoption or amendment of this Ordinance, that would not be allowed in the district under the

terms of this Ordinance, the lawful use may be continued so long as it remains otherwise lawful, subject to the following provisions:

A. No existing structure devoted to a use not permitted by this Ordinance in the district in which it is located shall be enlarged, extended, constructed, moved or structurally altered except in changing the use of the structure to a use permitted in the district in which it is located.

B. Any nonconforming use may be extended throughout any parts of a building which were manifestly arranged or designed for such use, and which existed at the time of adoption or amendment of this Ordinance, but no such use shall be extended to occupy any land outside such building.

C. In any district, if no structural alterations are made, any nonconforming use of a structure, or structure and premises, may be changed to another nonconforming use of the same or a more restricted classification provided that the Zoning Board of Appeals, either by general rule or by making findings in the specific case, shall find that the proposed use is equally appropriate or more appropriate to the district than the existing nonconforming use. In permitting such change, the Zoning Board of Appeals may require appropriate conditions and safeguards in accord with the purpose and intent of this Ordinance. Where a nonconforming use of a structure, land, or a structure and land in combination is hereafter changed to a more restrictive classification, it shall not thereafter be changed to a less restricted classification.

D. Any structure, or structure and land in combination, in or on which a nonconforming use is superseded by a permitted use, shall thereafter conform to the regulations for the district in which such structure is located, and the nonconforming use may not thereafter be resumed.

E. When a nonconforming use of a structure and premises in combination, is discontinued or ceases to exist for six (6) consecutive months, or for eighteen (18) months during any three year period, the structure, or structure and premises in combination, shall not thereafter be used except in conformance with the regulations of the district in which it is located. Structures occupied by seasonal uses shall be excepted from this provision.

F. Where nonconforming use status applies to a structure and premises in combination, removal or destruction of the structure shall eliminate the nonconforming status of the land.

15.6 Repairs and Maintenance. On any building devoted in whole or in part to any nonconforming use, work may be done in any period of twelve (12) consecutive months on ordinary repairs, or on repair or replacement of nonbearing walls, fixtures, wiring or plumbing, provided that the cubic content of the building as it ex-

isted at the time of passage or amendment of this Ordinance shall not be increased. Nothing in this Ordinance shall be deemed to prevent the strengthening or restoring to a safe condition of any building or part thereof declared to be unsafe by any official charged with protecting public safety, upon order of such official.

15.7 Uses Allowed as Special Land Uses Not Nonconforming Uses. Any use which is permitted as a special land use as provided in this Ordinance shall not be deemed a nonconforming use but shall without further action be deemed as a conforming use in such district.

15.8 Change of Tenancy or Ownership. There may be a change of tenancy, ownership or management of any existing nonconforming uses of land, structures and premises provided there is no change in the nature or character of such nonconforming uses.

ARTICLE 16
ADMINISTRATION AND ENFORCEMENT

16.1 Zoning Administrator.

A. The office of Zoning Administrator is hereby created. The Zoning Administrator shall be responsible for the administration and enforcement of this Ordinance, and shall be appointed by the Charter Township of Oxford Board of Trustees.

B. Duties and Powers of the Zoning Administrator. The Zoning Administrator, or their authorized designees, shall have the following duties and powers:

1. The Zoning Administrator shall interpret, administer, and enforce all provisions of this Zoning Ordinance and shall issue all necessary notices or orders to insure compliance with said provisions, except as otherwise provided elsewhere in this Ordinance.

2. The Zoning Administrator shall receive applications for and issue Zoning Compliance Permits in accordance with this Ordinance and shall authorize issuance of Certificates of Occupancy by the Building Official as required herein.

3. The Zoning Administrator shall make all inspections required by this Ordinance, and all inspections necessary to enforce the provisions of this Ordinance and may engage the assistance of the Township Fire Chief, Building Official, Planner and Engineer as deemed necessary in making such inspections. The Zoning Administrator may engage other expert opinion to assist in making such inspections, subject to approval of the Charter Township of Oxford Board of Trustees.

4. The Zoning Administrator shall identify and process all violations of the Zoning Ordinance. The Zoning Administrator shall be responsible for making inspections of the Township or parts thereof for the purpose of identifying violations of this Ordinance.

5. The Zoning Administrator shall keep official records of applications received, certificates issued, fees collected, reports of inspections, and notices and orders issued.

6. The Zoning Administrator shall submit to the Township Board and Planning Commission an annual report in which a summary of the activities of the office is presented.

C. Referral to Planning Commission. Whenever the Zoning Administrator is required to render a decision pursuant to this Ordinance, he or she shall have the ability to seek the opinion or interpretation of the Planning Commission on the matter at hand prior to rendering said decision.

16.2 Ordinance Enforcement Officer. The Zoning Administrator may be assisted in the enforcement of this Ordinance by the Township's Ordinance Enforcement Officer, as established in Ordinance No. 63. The Ordinance Enforcement Officer shall have, in addition to all power and authority granted to him or her by Michigan law and/or any Township Ordinances, the same enforcement authority granted to the Zoning Administrator in this Ordinance.

16.3 Zoning Compliance Permits.

A. Zoning Compliance Permits Required. The review and approval of Zoning Compliance Permits by the Zoning Administrator, as provided for in this Section, shall be required under the following circumstances:

1. Where Building Permits Are Required. All plans to be submitted to the Building Official for a building permit shall first be submitted for review and approval to the Zoning Administrator to determine compliance with the requirements of the Zoning Ordinance. No building permit shall be issued unless a Zoning Compliance Permit has been issued by the Zoning Administrator.

2. Where Certificates of Occupancy Are Required. Where a Certificate of Occupancy from the Building Official is required, the Certificate of Occupancy shall not be issued unless a Zoning Compliance Permit has been issued by the Zoning Administrator.

3. Use of Lot without Structure. Any lot vacant at the effective date of this Ordinance shall not be used, nor may any use of a lot without a structure existing at the effective date of this Ordinance be changed to any other use, unless a Zoning Compliance Permit shall have first been issued for the new or different use. A Zoning Compliance Permit shall not be required for agriculturally used lands, such as cropland, pasture land, and woodland.

4. Establishment of or Change in Use of Structure. A structure, or part thereof, shall not be changed to or occupied by a use different from the use that exists at the effective date of this Ordinance unless a Zoning Compliance Permit is first issued for the different use.

5. New or Altered Structure. A structure, or part thereof, which was erected or altered after the effective date of this Ordinance, shall not be occupied by, or devoted to a use different from the use that is existing at the effective date of this Ordinance, unless a final Zoning Compliance Permit is issued for the different use, or unless the

Zoning Administrator shall have established a reasonable time schedule for corrections.

B. Procedures.

1. Application. Application for a Zoning Compliance Permit shall be made to the Zoning Administrator. Application for a Zoning Compliance Permit may be made by the owner, or authorized agent of the owner, of the use or structure. If the application is made by a person other than the owner, it shall be accompanied by a duly verified affidavit of the owner that the proposed work or operation is authorized by the owner and that the applicant is authorized to make such application. The full names and addresses of the owner and authorized agent of the owner shall be stated in the application.

2. Submittal Requirements. Zoning Compliance Permits shall be applied for on an application form provided by the Zoning Administrator, and shall be accompanied either by a plot plan as required in this Section, or by a site plan as required under Article 12, whichever applies. If a site plan is not required under Article 12 herein, a plot plan shall be submitted, containing the following information:

   a. Scale, date, and north directional arrow.

   b. Location map showing major intersections, and dimensioned diagram of the lot or parcel.

   c. Locations, outlines, and dimensions of all existing and proposed structures, and the location and extent of all land uses not involving structures.

   d. A clear description of the existing and intended uses of the lot and all existing or proposed structures, including documentation of any legal non-conforming uses and structures.

   e. Additional information as required by the Zoning Administrator for the purposes of determining compliance with the provisions of this Ordinance.

3. Review. The Zoning Administrator shall examine all applications for Zoning Compliance Permits and amendments thereto within a reasonable time after filing. If the application or the plans do not conform to all requirements of this Ordinance, the Zoning Administrator shall reject such application in writing, stating the reasons therefore. If the application or plans conform, the Zoning Administrator shall issue a Zoning Compliance Permit, attaching his/her signature to each permit issued. The Zoning Administrator shall

stamp and endorse all sets of corrected and approved plans submitted with such application as "Approved."

4. Conditions for Issuance. Issuance of a Zoning Compliance Permit shall be subject to the following conditions:

   a. A Zoning Compliance Permit shall not be issued until the required fees have been paid.

   b. All work or use shall conform to the approved application and plans for which the Zoning Compliance Permit has been issued and any approved amendments thereto.

   c. All work or use shall conform to the approved Site Plan, where required.

C. Plan Amendments. Subject to the limitations of Section 16.3(B)(4), herein, approved amendments to a plan, application, or other records accompanying the same may be filed at any time with the Zoning Administrator before completion of the work for which the permit was approved and before a Certificate of Occupancy is issued; and such amendments, if approved, shall be deemed part of the original application and shall be filed therewith. Site plans required by Article 12 shall be amended in accordance with the provisions of that Article.

D. Abandonment and Extensions. An application for a Zoning Compliance Permit shall be deemed to have been abandoned six (6) months after the date of filing unless such application has been diligently pursued or a building permit shall have been issued, or a Certificate of Occupancy shall have been issued for a use not requiring a building permit. The Zoning Administrator may, for reasonable cause, grant one or more extensions of time for additional periods not exceeding ninety (90) days each. Any permit issued shall become invalid if the authorized work is suspended or abandoned for a period of six (6) months after time of commencing the work.

E. False Statements or Misrepresentation. In case of any false statement or misrepresentation of fact in the application or on the plans on which the permit was based, any Zoning Compliance Permit issued thereto shall be deemed null and void.

F. Non-Conforming Uses, Lots or Structures. A Zoning Compliance Permit shall be issued for a legally non-conforming use or structure upon application where determined to meet all other requirements. A Zoning Compliance Permit shall not be issued for any illegal non-conforming use or structure.

16.4 Building Permits.

A. No structure shall be erected, moved, added to, or structurally altered unless the appropriate building permit(s) has/have been issued therefore by the Building Official.

B. No building permit shall be issued by the Building Official for the erection, structural alteration, moving or repair of any structure or part thereof which does not comply with all provisions of this Ordinance and unless a Compliance Permit has been issued by the Zoning Administrator, except as provided in subsection C, below.

C. Where repairs to a single-family dwelling and/or residential accessory building are exclusive of structural, mechanical or electrical modifications, the Zoning Administrator shall not require a Certificate of Zoning Compliance.

D. Where the review of construction engineering drawings by the Township Engineer, and calling of a pre-construction meeting, is required pursuant to the Charter Township of Oxford Land Improvement Ordinance (No. 108A), no building permit shall be issued until these steps have been taken.

16.5 Certificates of Occupancy. No building, structure or use for which a Zoning Compliance Permit has been issued shall be used or occupied until the Zoning Administrator has, after final inspection, issued a Certificate of Occupancy indicating his/her opinion that all provisions of this Ordinance are being complied with at the time of issuance of the Certificate of Occupancy. The issuance of a Certificate of Occupancy shall in no case be construed as waiving any provisions of this ordinance.

A. Certificates of Occupancy shall not be issued for any building, structure, or use unless and until:

1. A Zoning Compliance Permit has been issued which certifies that the building, structure, and/or use proposed conform to the requirements of this Ordinance and the Building Code at the time of issuance of the Certificate of Occupancy.

2. The developer of a residential, commercial or industrial multi-unit development has submitted record drawings of all applicable improvements (including landscaping and that portion of the completed water system or sewer system servicing the development at issue), and the required record drawings have been approved and accepted by the Township Engineer. The record drawings shall conform to the requirements of the Sewer Operational Ordinance and Water Supply Ordinance, respectively.

3. A Certificate of Completion has been issued in the event any owner of land or agent having the written authorization of the Owner has applied for a Land Improvement Permit pursuant to the terms of the Township's Stormwater Drainage and Land Improvement Control Ordinance.

4. For any new building or structure, that new building or structure has been connected to the Township Water System and/or Sewer System where required to do so pursuant to the Township Sewer Operational Ordinance and/or Water Supply Ordinance, and the appropriate charges for connection to Water System or Sewer System have been paid.

B. Temporary Certificates of Occupancy.

1. Temporary Certificates of Occupancy may be considered for issuance by the administrative official where all of the following conditions are met:

   a. Site construction is substantially completed in full conformance with approved plans, and record drawings have been submitted to the Township.

   b. Remaining site improvements are not related to health, safety, or Americans with Disabilities Act (ADA) barrier-free compliance requirements.

   c. Remaining site improvements are related to landscaping, paving, or similar features which, due to their unique characteristics, cannot be completed due to weather conditions.

   d. Submittal of a performance guarantee, in conformance with Section 16.8, which is equal to the full cost of all incomplete site work as estimated by the Township, utilizing standard construction cost estimating publications.

2. Temporary Certificates of Occupancy are not intended to permit occupancy of a building or use of a site during fair weather seasons if site improvements are not complete. The owner/applicants scheduling of an opening date prior to completion of site work does not constitute grounds for issuance of a Temporary Certificates of Occupancy.

3. Temporary Certificates of Occupancy shall be granted for a period not to exceed six (6) months. Said period shall be based on a reasonable estimate of the time necessary to accommodate fair weather installation of all remaining improvements. No extensions of Temporary Certificates of Occupancy shall be granted.

4. Failure to complete all required site improvements will result in further action by the Township to ensure compliance with approved plans and the provisions of any temporary certificate of occupancy.

16.6 Compliance with Plans. Building permits and Certificates of Occupancy issued by the Building Department on the basis of plans and applications approved by the Zoning Administrator, Planning Commission and/or Township Board authorize only the use, arrangement, and construction set forth in such approved plans and applications, and no other use, arrangement, or construction. Use, arrangement, or construction at variance with that authorized shall be deemed a violation of this Ordinance.

16.7 Fees.

A. The Township Board shall establish a schedule of fees for administering this Ordinance. The schedule of fees shall be on public display in the office and may be changed from time to time by resolution of the Township Board. No certificate or permit shall be issued unless required fees have been paid in full. Such fees may include, but are not limited to, fees to be held in escrow for, by way of illustration and not limitation, the monitoring of the compliance of uses or proposed uses with the terms of Sections 10.1(J) and (K) of this Ordinance governing sound and vibration limitations.

B. Review Costs

1. An applicant for any approval or petitioner for any action under this ordinance shall be responsible for the cost of any professional review of such application performed by or on behalf of the Township.

2. Trust and Agency Accounts

a. Upon an application for any approval or petition for any action under this ordinance, the Zoning Administrator shall require the applicant or petitioner to pay a sum of money into a trust and agency account, which shall function as an escrow account, with such sum of money required being a reasonable estimate as to the professional review costs for the application for which the applicant is responsible under Section 16.7(B)(1). The Township may draw upon the trust and agency account in order to defray the costs to the Township of such professional reviews, and the Zoning Administrator shall require additional deposits into the trust and agency account in order to ensure that sufficient funds will be available to defray anticipated professional review costs.

b. All approvals under this ordinance shall be conditioned upon the applicant's or petitioner's compliance with Section

16.7(B)(1), either through the use of the trust and agency account or through payments to the Township other than deposits into the trust and agency account. No zoning compliance permits, building permits, or certificates of occupancy shall be issued until such time as an applicant has met its requirement under Section 16.7(B)(1).

c. Upon a determination that the Township will incur no further professional review costs for a given application, the Zoning Official shall release any funds remaining in the trust and agency account to the applicant or petitioner.

d. Neither the insufficiency of a trust and agency balance nor the issuance of any permit or approval shall excuse an applicant or petitioner from its obligation under Section 16.7(B)(1). The Township may enforce its right to collect such costs by suit or by placing a lien upon the property.

16.8 Performance Guarantees.

A. Intent and Scope of Requirements. To insure compliance with the provisions of this Ordinance or any conditions imposed thereunder, the Planning Commission or Township Board may require that a performance guarantee be deposited with the Township to insure faithful completion of improvements, in accordance with Section 505 of the Michigan Zoning Enabling Act, P.A. 110 of 2006, as amended, when one or more of the following conditions apply:

1. Failure to complete the improvements would be detrimental to future users of the property, adjacent properties, or the community as a whole;

2. The improvements are integral to community benefits associated with a proposal.

3. The improvements are likely to be phased or staged over a significant period of time.

B. Improvements for which the Township may require a performance guarantee include, but are not limited to, landscaping, berms, walls, lighting, driveways and parking, acceleration/deceleration lanes, traffic control devices, sidewalks, and land reclamation activities.

C. General Requirements. The performance guarantee shall meet the following requirements:

1. The performance guarantee shall be in the form of an irrevocable bank letter of credit or cash escrow. If the applicant posts a letter of

credit, the credit shall require only that the Township present the credit with a sight draft and an affidavit signed by the Township Supervisor attesting to the Township's right to draw funds under the credit. If the applicant posts a cash escrow, the escrow instructions shall provide that the escrow agent shall have a legal duty to deliver the funds to the Township whenever the Township Supervisor presents an affidavit to the agent attesting to the Township's right to received funds whether or not the applicant protests that right. If the applicant cannot produce a letter of credit with terms suitable to the Township, then a cash escrow shall be provided.

2. The performance guarantee shall be submitted at the time of issuance of the permit authorizing the activity or project. If appropriate based on the type of performance guarantee submitted, the Township shall deposit the funds in an interest-bearing account in a financial institution with which the Township regularly conducts business.

3. The amount of the performance guarantee shall be sufficient to cover the estimated cost of the improvements for which the performance guarantee is required, as well as the cost to prepare all required record drawings. The applicant shall provide an itemized schedule of estimated costs to complete all such improvements. The exact amount of the performance guarantee shall be determined by the Zoning Administrator.

4. The entire performance guarantee shall be returned to the applicant following inspection by the Zoning Administrator and a determination that the required improvements have been completed satisfactorily. The performance guarantee may be released to the applicant in proportion to the work completed on various elements, provided that a minimum of ten percent (10%) shall be held back on each element until satisfactory completion of the entire project.

5. An amount not less than ten percent (10%) of the total performance guarantee may be retained for a period of at least one (1) year after installation of landscape materials to insure proper maintenance and replacement, if necessary. This amount shall be released to the applicant upon certification by the Zoning Administrator that all landscape materials are being maintained in good condition.

D. Unsatisfactory Completion of Improvements. Whenever required improvements are not installed or maintained within the time stipulated or in accordance with the standards set forth in this Ordinance, the Township may complete the necessary improvements itself or by contract to an independent developer, and assess all costs of completing said improvements against the performance guarantee. Prior to completing said im-

provements, the Township shall notify the owner, site plan review applicant, or other firm or individual responsible for completion of the required improvements.

E. Trust and Agency Accounts. If an applicant fails to comply with the requirement of Section 16.7(B)(1), and its Trust and Agency account as provided for in Section 16.7(B)(2) has insufficient funds for the Township to draw upon in order to defray the costs of reviewing the applicant's application, then the Township may assess such costs against the performance guarantee.

16.9 Notice of Public Hearing. All applications requiring notice of a public hearing (including zoning ordinance text and map amendments, planned unit developments, special land use permits and ZBA hearings) shall comply with the Michigan Zoning Enabling Act (P.A. 110 of 2006), and the provisions of this Section with regard to public notification.

A. Responsibility. When the provisions of this Ordinance or the Michigan Zoning Enabling Act require that notice be published, the Zoning Administrator shall be responsible for preparing the content of the notice, having it published in a newspaper of general circulation in the Charter Township of Oxford and mailed or delivered as provided in this Section.

B. Content. All mail, personal and newspaper notices for public hearings shall include the following:

1. Nature of the Request. The notice shall identify whether the request is for a rezoning, text amendment, special land use, planned unit development, variance, appeal, ordinance interpretation or other purpose.

2. Location. The notice shall indicate the property that is the subject of the request, hereinafter referred to as the "subject property." The notice shall include a listing of all existing street addresses within the subject property. Street addresses do not need to be created and listed if no such addresses currently exist within the subject property. If there are no street addresses, other means of identification may be used such as a tax parcel identification number, identifying the nearest cross street, or including a map showing the location of the subject property. No street addresses must be listed when eleven (11) or more adjacent properties are proposed for a zoning amendment, or rezoning, or when the request is for an ordinance interpretation not involving a specific property.

3. Time and Place of Hearing. The notice shall indicate the date, time and place of the public hearing(s).

4. Written Comments. The notice shall include a statement describing when and where written comments will be received concerning the request. Include a statement that the public may appear at the public hearing in person or by counsel.

5. Handicap Access. The notice shall information concerning how handicap access will be accommodated if the meeting facility is not handicap accessible.

C. Publication of Notice in Newspaper. When notice of a public hearing is required pursuant to the Michigan Zoning Enabling Act (P.A. 110 of 2006) or the provisions of this Ordinance, the Zoning Administrator shall cause such notice to be published in a newspaper of general circulation in the Charter Township of Oxford not less than fifteen (15) days before the scheduled date of the public hearing.

D. Personal and Mailed Notice.

1. General. When the provisions of this Ordinance or state law require that personal or mailed notice be provided, such notice shall be provided to:

a. The owners of the subject property, and the applicant, if different than the owner(s) of the property.

b. To all persons to whom real property is assessed within three hundred (300) feet of the subject property, and to all occupants of structures within three hundred (300) feet of the subject property, regardless of whether the property or occupant is located within the boundaries of the Charter Township of Oxford. Notification of owners and occupants as provided herein shall not be required for zoning amendment requests involving eleven (11) or more adjacent properties or ordinance interpretation requests that do not involve a specific property.

i. If the name of the occupant is not known, the term "occupant" may be used in making notification.

ii. Notification need not be given to more than one (1) occupant of a structure, except that if a structure contains more than one (1) dwelling unit or spatial area owned or leased by different individuals, partnerships, businesses, or organizations, one (1) occupant of each unit or spatial area shall receive notice. In the case of a single structure containing more than four (4) dwelling units or other distinct spatial areas owned or leased by different individuals, partnerships, busi-

nesses or organizations, notice may be given to the manager or owner of the structure who shall be requested to post the notice at the primary entrance to the structure.

c. All neighborhood organizations, public utility companies, railroads and other persons which have requested to receive notice pursuant to Section 16.9(E).

2. Notice by Mail, Affidavit. Notice shall be deemed mailed by its deposit in the United States mail, first class, properly addressed, postage paid. The Zoning Administrator shall prepare a list of property owners and registrants to whom notice was mailed, as well as of anyone to whom personal notice was delivered.

3. Timing. Unless otherwise provided in the Michigan Zoning Enabling Act (P.A. 110 of 2006) or this Ordinance where applicable, notice of a public hearing shall be provided, whether via mail or in person, not less than fifteen (15) days before the scheduled date of the public hearing.

E. Registration to Receive Notice by Mail.

1. General. Any neighborhood organization, public utility company, railroad or any other person may register with the Zoning Administrator to receive written notice of all applications for development approval or written notice of all applications for development approval within the zoning district in which they are located. The Zoning Administrator shall be responsible for providing this notification. Fees may be assessed for the provision of this notice, as established by the Township Board.

2. Requirements. The requesting party must provide the Zoning Administrator information on an official form to ensure notification can be made. All registered persons must re-register annually to continue to receive notification pursuant to this Section.

16.10 Violations and Penalties.

A. Violation of the provisions of this Ordinance shall constitute a municipal civil infraction. A person found responsible for a violation of this Ordinance shall be subject to a civil fine to be determined by the Michigan District Court with jurisdiction of this Township. The person responsible shall also be subject to costs, including all expenses, direct and indirect, to which the Township has been put to enforce this Ordinance, as provided by law. In the event a person responsible has been issued a civil fine and costs as set forth under court order, the Township may obtain a lien against the land, building(s) and/or structure(s) involved in the violation

and such lien may be enforced and discharged subject to the procedures and limitations cited at MCL 600.8731(3). The penalties set forth in this section are otherwise controlled by the requirements of Public Acts 12 and 13 of 1994. The Township may further pursue injunctive remedies permitted at law to enforce this Ordinance.

B. The Zoning Administrator or his designee, including the Zoning Enforcement Officer, is authorized to issue notices of violation and appearance tickets for alleged violations of this Ordinance.

C. Stop-work Order. Upon notice from the Zoning Administrator or his designee that work on any structure or premises is being pursued contrary to the provisions of this Ordinance, such work shall be immediately stopped. The stop-work order shall be in writing and shall be given to the owner of the property involved, or to the person doing the work, or shall be posted conspicuously at the premises, and shall state the conditions under which the work may be resumed. Any person who shall continue any work in or about the structure or premises after having been served with a stop-work order, except such work as he is directed by the Zoning Administrator to perform to remove a violation or unsafe conditions, shall be in violation of this Ordinance.

D. Each day that any person, premises, or location is in violation of this Ordinance shall constitute a separate violation of the Ordinance.

16.11 Completion of Construction.

A. Nothing in this Ordinance shall require a change in plans, construction, or designated use of any building on which actual construction was lawfully begun prior to the effective date of adoption or amendment of this Ordinance and upon which actual building construction has been carried on diligently. Actual construction is hereby defined to include the placing of construction materials in permanent position and fastened in a permanent manner. Where excavation or demolition or removal of an existing building has been substantially begun preparatory to rebuilding, such excavation or demolition or removal shall be deemed to be actual construction, provided that work shall be carried on diligently.

B. Where a building permit has been issued in accordance with the law prior to the effective date of this Ordinance and provided that construction is begun within three hundred sixty-five (365) days of such effective date and diligently pursued to completion, said building or structure may be completed in accordance with the approved plans on the basis of which the building permit was issued, and further, may upon completion, be occupied by the use for which it was originally designated, subject thereafter to the provisions of Article 15 of this Ordinance, if applicable. No basement, cellar, garage, or any incompletely constructed structure in use as a dwell-

ing at the effective date of this Ordinance shall be used as a dwelling for more than twelve (12) months following said date, unless such structure has been completed in conformance with the regulations of the district in which it is located.

ARTICLE 17
ZONING BOARD OF APPEALS

17.1 Establishment. The Charter Township of Oxford Zoning Board of Appeals is hereby established, hereinafter called the ZBA. The ZBA shall perform its duties and exercise its powers in accordance with this Article and Article VI of the Michigan Zoning Enabling Act (P.A. 110 of 2006), as amended, and in such a way that the objectives of this Zoning Ordinance shall be observed, public health, safety and welfare secured, and substantial justice done.

17.2 Membership.

A. Composition. The ZBA shall consist of seven (7) members, appointed by the Township Board. The first regular member of the ZBA shall be a member of the Township Planning Commission. The remaining members, and any alternate members, shall be representative of the population distribution and of the various interests in the Township. One regular member may be a member of the Township Board, however a member of the Township Board shall not serve as Chairperson of the ZBA. An employee or contractor of the Township Board may not serve as a member of the ZBA.

B. Alternate Members. The Township Board may appoint not more than two (2) alternate members for the same term as regular members to the ZBA. An alternate member may be called as specified to serve as a member of the ZBA in the absence of a regular member if the regular member will be unable to attend one (1) or more meetings. An alternate member may also be called to serve as a member for the purpose of reaching a decision on a case in which the member has abstained for reasons of conflict of interest. The alternate member appointed shall serve in the case until a final decision is made. The alternate member has the same voting rights as a regular member of the ZBA.

C. Removal. A member of the ZBA may be removed by the Township Board for misfeasance, malfeasance, or nonfeasance in office upon written charges and after public hearing. A member shall disqualify himself or herself from a vote in which the member has a conflict of interest. Failure of a member to disqualify himself or herself from a vote in which the member has a conflict of interest constitutes malfeasance in office.

D. Terms of Office. The terms of office for members appointed to the ZBA shall be for 3 years, except for members serving because of their membership on the Planning Commission or Township Board, whose terms shall be limited to the time they are members of those bodies. A successor shall be appointed not more than 1 month after the term of the preceding

member has expired. Vacancies for unexpired terms shall be filled for the remainder of the term.

17.3 Meetings. Meetings of the ZBA shall be held at the call of the chairperson and at other times as the ZBA in its rules of procedure may specify. The chairperson or, in his or her absence, the acting chairperson may administer oaths and compel the attendance of witnesses. The ZBA shall not conduct business unless a majority of its regular members are present.

17.4 Voting. The concurring vote of a majority of the members of the ZBA is necessary to reverse an order, requirement, decision, or determination of the administrative official or body, to decide in favor of the applicant on a matter upon which the ZBA is required to pass under the Zoning Ordinance, or to grant a variance of Zoning Ordinance requirements.

17.5 Minutes. The ZBA shall keep minutes of its proceedings, showing the vote of each member upon each question, or if absent or failing to vote indicating such fact, and shall keep records of its examinations and other official actions, all of which shall be a public record and be immediately filed in the office of the Township Clerk.

17.6 Jurisdiction. The ZBA shall hear and decide questions that arise in the administration of the Zoning Ordinance, including the interpretation of the Official Zoning Map, and may adopt rules to govern its procedures. The ZBA shall also hear and decide on matters referred to it or upon which it is required to pass under this Ordinance. It shall hear and decide appeals from and review any administrative order, requirement, decision, or determination made by an administrative official or body charged with enforcement of this Ordinance. The ZBA shall not have the power or authority to hear an appeal relative to any decision rendered on a planned unit development, or relative to any decision rendered on a special land use permit pursuant to the discretionary standards of Section 4.5. Decisions rendered on a special land use permit pursuant to any non-discretionary standard or requirement of this Ordinance may be appealed to the ZBA.

17.7 Appeals. The ZBA shall hear and decide appeals where it is alleged there is error in any order, requirement, decision, or determination made by an administrative official or body in the enforcement of this Ordinance. An appeal to the ZBA may be taken by a person aggrieved, or by an officer, department, board, or bureau of the Township. The ZBA shall not hear appeals of special land use or planned unit development decisions.

A. Filing of Appeal. An appeal under this section shall be taken within twenty-one (21) days, by the filing with the administrative body or official from whom the appeal is taken and with the ZBA of a notice of appeal specifying the grounds for the appeal. The body or officer from whom the appeal is taken shall immediately transmit to the ZBA all of the papers constituting the record upon which the action appealed from was taken.

B. Stay of Proceedings. An appeal to the ZBA stays all proceedings in furtherance of the action appealed from unless the body or officer from whom the appeal is taken certifies to the ZBA after the notice of appeal is filed that, by reason of facts stated in the certificate, a stay would in the opinion of the body or officer cause imminent peril to life or property, in which case proceedings may be stayed by a restraining order issued by the ZBA or a circuit court.

C. Hearing. Upon receipt of a written request for an appeal of an administrative decision, the ZBA shall fix a reasonable time for the hearing of the request, not to exceed 30 days from the filing of the notice of appeal, and give notice as provided in Section 16.9. At the hearing, a party may appear in person or by agent or attorney.

D. The ZBA shall overturn, wholly or in part, an order, requirement, decision or determination only if it finds that the appealed action was inconsistent with this Ordinance. To implement such action, the ZBA shall make such order, decision, or determination as ought to be made, consistent with the terms of this Ordinance, and to that end shall have the powers of the administrative body or official from whom the appeal is taken under appellate jurisdiction.

17.8 Variances. The ZBA may, on a case-by-case basis, authorize such nonuse variances from the terms of this Ordinance as will not be contrary to the public interest where, owing to special conditions, a literal enforcement of the provisions of this ordinance would result in practical difficulties.

A. Variances Permitted. The ZBA shall have the authority to grant nonuse variances relating to the construction, structural changes, or alteration of buildings or structures related to dimensional requirements of the Zoning Ordinance or to any other nonuse-related standard in this Ordinance. Under no circumstances shall the ZBA grant a variance to allow a use not permissible under the terms of this Ordinance in the district involved, or any use expressly or by implication prohibited by the terms of this Ordinance in said district.

B. Procedures. A variance from the terms of this Ordinance shall not be granted by the ZBA except in accordance with the following procedures:

1. Submittal of Application. A written application for a variance shall be submitted, demonstrating conformance with the standards outlined in Section 17.8(C).

2. Hearing. Upon receipt of the written application for a variance, the ZBA shall fix a reasonable time for the hearing of the request, not to exceed 30 days from the filing of the application, and give notice as

provided in Section 16.9. At the hearing, a party may appear in person or by agent or attorney.

3. ZBA Findings.

   a. The ZBA shall make findings of fact based upon competent evidence that practical difficulty has been demonstrated in accordance with the standards of Section 17.8(C) **.**

   b. The ZBA shall further make a finding that the reasons set forth in the application justify the granting of a variance, and that the variance is the minimum variance that will make possible the reasonable use of the land, building, or structure.

   c. The ZBA shall further make a finding that the granting of the variance will be in harmony with the general purpose and intent of this Ordinance, and will not be injurious to the neighborhood, or otherwise detrimental to the public welfare.

C. Standards. Neither the nonconforming use of neighboring lands, structures, or buildings in the same district, nor either the permitted or nonconforming use of lands, structures, or buildings in any other district(s) shall be considered grounds for the issuance of a variance. In reviewing a request for variance, the following standards for determining practical difficulty shall be considered, with no single factor being determinative:

   1. Strict compliance with restrictions governing area, setback, frontage, height, bulk, density or other non-use matters, will unreasonably prevent the owner from using the property for a permitted purpose or will render ordinance conformity unnecessarily burdensome.

   2. The variance will do substantial justice to the applicant, as well as to other property owners.

   3. A lesser variance than requested will not give substantial relief to the applicant and will not be more consistent with justice to other property owners.

   4. The need for the variance is due to the unique circumstances peculiar to the property and not generally applicable in the area or to other properties in the same zoning district.

   5. The problem and resulting need for the variance has not been self-created by the applicant and/or the applicant's predecessors.

D. Conditions and Safeguards. In granting any variance, the ZBA may prescribe appropriate conditions and safeguards in conformity with this Ordinance. Violation of such conditions and safeguards, when made a part of the terms under which the variance is granted, shall be deemed a violation of this Ordinance and punishable under Article 16 of this Ordinance. Conditions imposed shall meet all of the following requirements:

1. Be designed to protect natural resources, the health, safety and welfare, and the social and economic well being of those who will use the building, land or activity under consideration, residents and landowners immediately adjacent to the proposed building, land use or activity, and the community as a whole.

2. Be related to the valid exercise of the police power, and purposes which are affected by the proposed building, use or activity.

3. Be necessary to meet the intent and purpose of the Zoning Ordinance, be related to the standards established in the Ordinance for the building, land use or activity under consideration, and be necessary to insure compliance with those standards.

E. Expiration. Each variance approved shall become null and void unless a building permit has been issued for the construction authorized by the variance within 365 calendar days after the date of approval and construction has been pursued diligently to completion; or the occupancy of land or buildings authorized by the variance has commenced within 365 calendar days after the date of approval.

1. Where a building permit has been issued for construction authorized by a variance, the variance shall become null and void upon expiration of the building permit.

2. Where a variance has been approved for a project subject to site plan approval per Article 12 (Site Plan Review), the variance shall become null and void only upon expiration of an approved final site plan for the project.

3. The Board of Appeals may, upon written request by the petitioner with a showing of good cause, grant one (1) extension of variance approval for up to an additional 180 calendar days.

17.9 Appeals from the Zoning Board of Appeals. The decision of the ZBA shall be final. Any person or persons, or any taxpayer, department, board, or bureau of the municipality aggrieved by any decision of the ZBA may seek review by a court of record of such decision, in the manner provided by the laws of the State of Michigan.

ARTICLE 18
AMENDMENT

18.1 Initiating Amendments. The Township Board may, from time to time, amend, modify, supplement, or revise the district boundaries or the provisions and regulations of this Ordinance. Amendments may be initiated by the Township Board, the Township Planning Commission, by petition of one or more property owners of the Charter Township of Oxford, or by one (1) or more persons acting on behalf of a property owner(s) of the Charter Township of Oxford. All proposed amendments shall be referred to the Township Planning Commission for review, public hearing, and recommendation before action may be taken thereon by the Township Board.

18.2 Amendment Procedure. The procedure for amending this Ordinance shall be in accordance with the Michigan Zoning Enabling Act (P.A. 110 of 2006), as amended, and the following:

A. Application for amendment shall be made by submitting the application, along with all information required under Section 18.3 and the required fee (as established by the Township Board), to the Zoning Administrator. The completion of such application shall not be required for zoning amendment initiated by officials or bodies of the Township.

B. After receipt of filing, the Zoning Administrator shall transmit a copy of the application and required information to the Planning Commission. The Planning Commission shall establish a date for a public hearing on the application and give notice of the hearing pursuant to Section 16.9.

C. In reviewing any petition for a zoning amendment, the Planning Commission shall evaluate all factors relevant to the petition, and shall make its recommendations for disposition of the petition to the Township Board following the public hearing. Following receipt of the Planning Commission's recommendation, the Township Board shall render a final decision on the proposed zoning amendment. All findings shall be made a part of the public records of the meetings of the Planning Commission and the Township Board.

18.3 Information Required.

A. If a petition involves an amendment to the Official Zoning Map, the petitioner shall submit the following information:

1. A legal description of the property, including a street address and tax ID number(s).

2. A scaled map of the property, correlated with the legal description, and clearly showing the property's location.

3. The name and address of the petitioner, the record owner, and all other parties claiming an interest in said property.

4. The petitioners interest in the property. If the petitioner is not the record owner, the name and address of the record owner(s), and the record owner(s) and other interested parties signed consent to the petition. The consent of mortgagees, lienors, and similar such parties shall not be required.

5. Signature(s) of petitioner(s) and owner(s) certifying the accuracy of the information.

6. Identification of the zoning district requested and the existing zoning classification of property.

7. A vicinity map showing the location of the property, and adjacent land uses and zoning districts.

B. If a petition involves a change in the text of the Zoning Ordinance, the petitioner shall submit the following information:

1. A detailed statement of the proposed amendment, clearly and completely setting forth all proposed provisions and regulations, including all changes in the Zoning Ordinance necessary to accommodate the proposed amendment.

2. Name and address of the petitioner.

3. Reasons for the proposed amendment.

18.4 Publication. Following Township Board approval of a petition to amend the Zoning Ordinance, notice of the amendment shall be published within fifteen (15) days after adoption in a newspaper of general circulation within the Charter Township of Oxford. The notice of adoption shall include the following information:

A. Either a summary of the regulatory effect of the amendment, including the geographic area affected, or the text of the amendment.

B. The effective date of the amendment.

C. The place where and time when a copy of the amendment may be purchased or inspected.

18.5 Conditional Rezoning.

A. **Intent.** It is recognized that there are certain instances where it would be in the best interests of the Township, as well as advantageous to property owners seeking a change in zoning classification, that certain conditions could be proposed by property owners as part of a request for rezoning. This is especially true since the Township must consider all potential uses which may be made of property when considering a traditional rezoning request, some of which may be inappropriate for a particular piece of property considering such items as, but not limited to, the surrounding land uses, the Township Master Plan, available infrastructure and utilities, and natural features. It is the intent of this Section to provide a process consistent with the provisions of Section 405 of the Michigan Zoning Enabling Act, Public Act 110 of 2006 as amended, MCL 125.3101 et. seq., by which the owner seeking a rezoning may voluntarily propose conditions regarding the use and/or development of land as part of the rezoning request.

B. **Application and Offer of Conditions.** An owner of land may voluntarily offer in writing conditions relating to the use and/or development of land for which a conditional rezoning is requested. This offer may be made either at the time the application for conditional rezoning is filed, or additional conditions may be offered at a later time during the conditional rezoning process as set forth below:

1. General Procedure. A request for conditional rezoning shall be commenced by filing an application with the Township Zoning Administrator or designee, on the required forms, accompanied by the specified fees. The application and process for considering a conditional rezoning request will be the same as that for considering a rezoning request without any conditions, except as modified by this Section. The application shall explicitly describe the proposed conditional rezoning and shall be signed by the owner of the property. Applications for conditional rezoning of a specific site shall be accompanied by a plot plan or survey which contains all the information required in Section 18.3 of this Ordinance. The applicant shall also present a preliminary plan showing the specific proposed use of the property and containing all the information outlined in Section 12.3(B) of this Ordinance.

2. Pre-Application Conference. Prior to filing a formal request for a conditional rezoning, and prior to a public hearing, the applicant shall informally meet with the Township Zoning Administrator or designee, and other representatives as deemed necessary by the Township, to discuss the proposed development. The Pre-Application Conference is intended to be informative and advisory in nature, and affords the applicant the opportunity to discuss the

land use and planning policies of the Charter Township of Oxford. The applicant shall present a preliminary plan for the contemplated conditional rezoning at or before the Pre-Application Conference. Any and all statements made by the Charter Township of Oxford Board of Trustees, Zoning Administrator or designee, Planning Commissioners, Township employees, attorneys, agents, or representatives at the Pre-Application Conference have no legal force and are not legal and binding promises, commitments, or contracts.

C. **Review Procedures.** The offer of conditions may not purport to authorize uses or developments not permitted in the requested Zoning District. The owner's offer of conditions shall bear a reasonable and rational relationship to the property for which the conditional rezoning is requested. Further, the Planning Commission and Township Board shall, at a minimum, consider all the review considerations contained in Section 18.2(C) of this Ordinance in rendering a decision on a request for conditional rezoning.

1. Other Required Approvals.

   a. Any use or development proposed as part of an offer of conditions that would require a Special Land Use Permit under the terms of this Ordinance may only be commenced if a Special Land Use Permit for such use or development is ultimately granted in accordance with the provisions of this Ordinance.

   b. Any use or development proposed as part of an offer of conditions that would require a variance under the terms of this Ordinance may only be commenced if a variance for such use or development is ultimately granted by the Zoning Board of Appeals in accordance with this Ordinance.

   c. Any use or development proposed as part of an offer of conditions that would require site plan approval under the terms of this Ordinance may only be commenced if site plan approval for such use or development is ultimately granted in accordance with the terms of this Ordinance.

2. Amendment of Conditions. The offer of conditions may be amended during the process of conditional rezoning consideration, provided that any amended or additional conditions are entered voluntarily by the owner, and confirmed in writing. An owner may withdraw in writing all or part of its offer of conditions any time prior to final rezoning action of the Township Board provided that, if such withdrawal occurs subsequent to the Planning Commission's Public Hearing on the original rezoning request, then the rezoning applica-

tion shall be referred back to the Planning Commission for a new Public Hearing with appropriate notice and a new recommendation.

D. **Planning Commission Review.** The Planning Commission, after a public hearing and consideration of the factors for rezoning set forth in Section 18.2(C) of this Ordinance, may recommend approval, approval with recommended changes, or denial of the rezoning; provided however, that any recommended changes to the offer of conditions are acceptable to and thereafter offered to the owner in writing. In the event that any recommended changes to the offer of conditions are not subsequently offered by the owner in writing, the recommendation of the Planning Commission shall be considered by the Township Board to be a recommendation of denial of the proposed conditional rezoning.

E. **Township Board Review.** After receipt of the Planning Commission's recommendation, the Township Board shall review the Planning Commission's recommendation and deliberate upon the requested conditional rezoning, considering the factors for rezoning set forth in Section 18.2(C), and may approve or deny the conditional rezoning request. If the applicant initiates additional or different conditions not considered by the Planning Commission subsequent to the recommendation of the Planning Commission, then the Township Board shall refer such proposed additional or different conditions to the Planning Commission for report within a time specified by the Township Board, and the Township Board shall thereafter proceed to deny or approve the conditional rezoning.

F. **Approval.** If the Township Board finds the conditional rezoning request and offer of conditions acceptable, the offer of conditions shall be incorporated into a formal written Statement of Conditions acceptable to the owner and conforming in form to the provisions of this Section. The Statement of Conditions shall be incorporated by attachment or otherwise as an inseparable part of the Ordinance adopted by the Township Board to accomplish the requested conditional rezoning. The Statement of Conditions shall:

1. Be prepared in a form recordable with the Oakland County Register of Deeds;

2. Contain a legal description of the land to which it pertains**;**

3. Contain a statement acknowledging that the Statement of Conditions runs with the land, and is binding upon successor owners of the land;

4. Incorporate by attachment the preliminary plan which formed the basis of the conditional rezoning;

5. Contain the notarized signatures of all the owners of the property, and that they voluntarily offer and consent to the provisions contained with the Statement of Conditions;

6. The Statement of Conditions may be reviewed and approved by the Township Attorney, with the applicant to pay all costs associated with such review and approval.

The approved Statement of Conditions shall be filed by the owner with the Oakland County Register of Deeds within thirty (30) days after approval of the conditional rezoning. The owner shall provide the Township with a recorded copy of the Statement of Conditions within thirty (30) days of receipt.

Upon the conditional rezoning taking effect, the Zoning Map shall be amended to reflect the new zoning classification, together with a designation that the land was a Conditional Rezoning with a Statement of Conditions. Upon the conditional rezoning taking effect, and after the required recording of the Statement of Conditions, unless waived, use of the land so rezoned shall conform thereafter to all the requirements regulating use and development within the new Zoning District as modified by any more restrictive provisions contained in the Statement of Conditions.

G. **Compliance with Conditions.** Any person who establishes development or commences a use upon land that has been conditionally rezoned shall continuously operate and maintain the development or use in full compliance with all the conditions set forth in the Statement of Conditions. Any failure to comply fully with the conditions contained within the Statement of Conditions shall constitute a violation of this Ordinance and be punishable accordingly. Additionally, any such violation shall be deemed a nuisance per se and subject to judicial abatement by law.

H. **Time Period for Establishing Development or Use.** The approved development and/or use of the land pursuant to building and other required permits must be commenced upon the land within twelve (12) months after the effective date by publication of the conditional rezoning action, and must thereafter proceed diligently to completion. This time limitation, may upon written request, be extended by the Township Board if:

1. It is demonstrated to the Township Board's sole satisfaction that there is a strong likelihood that the development and/or use will commence within the period of extension and proceed diligently thereafter to completion, and

2. The Township Board finds that there has been change in circumstances that would render the conditional rezoning with Statement of Conditions incompatible with other Zoning Districts and uses in

the surrounding area or otherwise inconsistent with sound zoning policy.

I. **Reversion of Zoning.** If an approved development and/or use of the rezoned land does not occur within the time frame specified in Subsection H above, then the land shall revert to its former zoning classification as set forth in MCL 125.3405(2). The reversion process shall be initiated by the Township Board, and proceed pursuant to Section 18.2.

J. **Subsequent Rezoning of Land.** When land that is conditionally rezoned with the Statement of Conditions is thereafter rezoned to a different zoning classification, or to the same zoning classification but with a different or no Statement of Conditions, whether as a result of a reversion of zoning pursuant to Subsection I above, or upon application of the landowner, or otherwise, the Statement of Conditions imposed under the former zoning classification shall cease to be in effect. Upon the owner's written request, the Township Clerk shall record with the Oakland County Register of Deeds a notice that the Statement of Conditions is no longer in effect.

K. **Amendment of Conditions.** During the time period for commencement of an approved development or use specified pursuant to Subsection H above, or during any extension thereof granted by the Township Board, the Township shall not add to or alter the conditions in the Statement of Conditions. The Statement of Conditions may be amended thereafter in the same manner as was prescribed for the original conditional rezoning and Statement of Conditions.

L. **Township Right to Rezone.** Nothing in the Statement of Conditions nor in the provisions of this Section shall be deemed to prohibit the Township from rezoning all or any portion of land that is subject to a Statement of Conditions to another zoning classification. Any rezoning shall be conducted in compliance with this Ordinance and the Michigan Zoning Enabling Act, Public Act 110 of 2006 as amended, MCL 125.3101 et seq.

M. **Failure to Offer Conditions.** The Township shall not require an owner to offer conditions as a requirement for rezoning. The lack of an offer of conditions shall not affect an owner's rights under this Ordinance.

ARTICLE 19
PLANNING COMMISSION

19.1 Authority of the Planning Commission. The Oxford Township Planning Commission is designated as the Planning Commission specified in Section 301 of Public Act 110 of 2006, as amended, which enables and governs the activities and procedures under this Ordinance.

19.2 Jurisdiction of the Planning Commission. The Planning Commission shall have such powers, duties, and responsibilities as are expressly provided for in this Ordinance, the Michigan Enabling Act (Public Act 110 of 2006, as amended), and the Michigan Planning Enabling Act (Public Act 33 of 2008, as amended).

19.3 Rules of Procedure of the Planning Commission. The Planning Commission shall conduct business, organize meetings, and perform its duties as provided for in this Ordinance, the Michigan Zoning Enabling Act (Public Act 110 of 2006, as amended), the Michigan Planning Enabling Act (Public Act 33 of 2008, as amended), and the adopted Oxford Township Planning Commission Bylaws and Rules of Procedure.

19.4 Powers and Duties of the Planning Commission. The Planning Commission shall discharge the following duties pursuant to this Ordinance:

A. Zoning Ordinance. The Planning Commission shall perform zoning duties of said commission as provided in Public Act 110 of 2006, as amended, and this Ordinance. The Planning Commission shall be responsible for formulation of the Zoning Ordinance, review of amendments to the Zoning Ordinance, holding hearings on a proposed Zoning Ordinance or amendments thereto, and reporting its findings and recommendations concerning the Zoning Ordinance or amendments to the Township Board.

B. Site Plan Review. The Planning Commission shall be responsible for reviewing site plans and site plan amendments, and making determinations to approve, approve subject to conditions, or deny applications for site plan approval in accordance with Article 12 (Site Plan Review).

C. Special Land Use Review. The Planning Commission shall be responsible for holding hearings, reviewing, and making determinations to approve, approve subject to conditions, or deny applications for special land uses (and amendments to special land uses) in accordance with Article 4 (special land uses).

D. Site and Building Condominium Plan Review. The Planning Commission shall be responsible for reviewing building and site condominium plans and building and site condominium plan amendments in accordance with Article 13 (Condominium Regulations). For site condominiums, the Planning Commission shall be responsible for making a recommendation to the Township Board to grant approval, approval with conditions, or denial of a proposed site condominium development and any amendments to a site condominium development.

E. Planned Unit Development Review. The Planning Commission shall be responsible for holding hearings and reviewing all applications for planned unit development approval in accordance with Article 14 (Planned Unit Development). The Planning Commission shall be responsible for making a recommendation to the Township Board to grant approval, approval with conditions, or denial of a proposed planned unit development and any amendments to a planned unit development.

F. Private Road Review. The Planning Commission shall be responsible for holding hearings, reviewing, and making determinations to approve, approve subject to conditions, or deny applications all applications for private road approval in accordance with Article 11 (Private Roads).

G. Other Duties and Responsibilities.

1. The Planning Commission shall submit an annual report to the Township Board concerning its operations and the status of planning activities, including recommendations regarding actions by the legislative body related to planning and development.

2. The Planning Commission shall prepare a Capital Improvement Plan.

3. The Planning Commission shall take such action on petitions, staff proposals and Township Board requests for amendments to the Master Plan.

4. The Planning Commission shall review subdivision proposals and recommend appropriate actions to the Township Board.

5. The Planning Commission shall be responsible for review of any other matters relating to land development referred to the Commission by the Township Board. The Planning Commission shall recommend appropriate regulations and action on such matters.